GRUNDFOS

WHITE PAPER

CASING VS. FRAME MOUNTING ON END SUCTION PUMPS

by Steve Wilson

Maintenance cost is one of the major factors that encompass the life cycle cost of a pump and pumping system. This White Paper will discuss the mounting configurations available for flexibly coupled, end suction pumps (also referred to as frame mounted or base mounted pumps) and how those configurations may impact maintenance costs.

The whole is equal to the sum of its parts, so any discussion of one part of the pump selection and construction must be taken as just that – one aspect. We will not attempt to discuss impeller types, couplings, single vs. double volutes, tangential vs. centerline discharge constructions, etc. Those topics are outside the scope of this paper.

We will briefly have some discourse on proper selection of pumps and components, casing materials, pullout, piping, alignments, and other factors impacting maintenance costs.

MAJOR FACTORS OF MAINTENANCE COSTS

Two major factors should be considered when discussing maintenance costs: MTBF (Mean Time Between Failure) and Downtime Cost.

MTBF

Generally speaking, it's desirable to keep the pumps in a system running as they are. Extending the MTBF is of primary importance, and factors impacting MTBF should be evaluated. (For reference, many papers, articles, and books have been written on the subject.)

DOWNTIME COST

When pumps and systems must be removed from operation for service or repairs, there are costs associated with that downtime. Those costs can be minimal or high, depending on the installation, and these costs should be evaluated and considered as well. Parts costs are included in the downtime cost.

FACTORS IMPACTING MTBF AND DOWNTIME COSTS

Several factors – as well as proper training of maintenance personnel, a proper preventative maintenance program, and a properly sized and designed system – have direct influence on MTBF and downtime costs. Each has bearing on the mounting configuration suitability. They are:

PROPER SELECTION OF PUMPS AND COMPONENTS

Notwithstanding proper hydraulic selection, which is very important in operating cost evaluation, selecting the most appropriately sized pump will assure operation within the manufacturer's preferred operating range and reduce loads on the bearings and seal components. This extends MTBF and reduces the wear on components, further reducing the downtime cost.

The pump components should be selected for the application and should be of tight, renewable tolerance to ensure restoration to "like new" performance without extensive overhaul.

The tighter the tolerances internal to the pump, the more efficient the pump is, and the lower the operating costs will be. It's important that the installation accommodates these tolerances without increasing maintenance costs.

PROPER PIPING

As discussed in the *Piping Connection Considerations* White Paper, proper piping is a must for life extension. As stated in the paper, as well as in numerous other sources, one of the factors of proper piping is proper support of the piping.

According to the Hydraulic Institute (HI), "Suction and discharge piping must be anchored, supported, and restrained near the pump to avoid applications of forces and moments."

In the *Pump Handbook*, Karassik states, "The suction and discharge piping and all associated valves, strainers, etc., should be supported near to but independent of the pump, so that no strain will be transmitted to the pump casing."

PROPER INSTALLATION

In addition to ensuring that piping is appropriately supported and connected to the pump, it is imperative for proper installation that the pump be correctly mounted on the floor (or housekeeping pad), leveled, and (typically) grouted in place.

A multi-stepped alignment process is recommended by HI and by every major pump manufacturer. Due to the relatively tight tolerances of wear and rotating parts, such as wear rings, sleeves, impellers, seals, and bearings, alignment must be precise, or parts may bind and "freeze up" or wear out prematurely.

The steps outlined by HI should be followed in order to increase MTBF and reduce downtime cost. As stated on page 498 of Lobanoff's *Centrifugal Pumps: Design and Application*, "Experience has shown...that...misalignment can lead to premature failure of bearings, seals, couplings, and other parts. Service interruptions, fire, and personal injury can result....Costs of such a failure will seldom be less than several thousand dollars and can easily run into millions if failure consequences go beyond the original pump."

CASING MATERIALS

Casing materials must be selected to be compatible with the pumpage. The vast majority of pumps which use cast casings (or volutes - the terms here will be used synonymously) are composed of cast iron, also called grey iron. This material is relatively inexpensive to cast, easy to machine, strong with a tensile strength from 25 to 40 ksi, and handles a wide range of pumpages.

The crystalline nature of cast (grey) iron, with flakes of graphite, is such that the material is brittle and can withstand virtually no external forces and moments.

In ductile (nodular) iron, the graphite is present in nodules. These nodules present an "islanding" matrix and provide an enhanced ductility. A ductile iron pump is more able to handle external forces and moments as a result, though tolerance issues may still pose reduced MTBF.

This is also true of steel and SS alloys due to their reduced carbon content. However, the issues associated with proper installation do not disappear: just because a pump casting ***can*** withstand some forces and moments does not imply that they ***should*** be installed to insure they will.

OTHER FACTORS

Other factors which grossly affect maintenance costs include labor, materials, and other costs associated with downtime (such as lost revenue) and indicate the importance of a simple pump design with features like

- "back pullout" (where the rotating assembly can be removed without disturbing the piping),
- casing wear rings (to avoid replacement of the case in the event of wear), and
- shaft sleeves

so that when the pumps must be repaired, the costs can be minimized and the pumps returned to service in an expeditious manner.

PUMP MOUNTING APPROACHES

Essentially, there are two approaches to mounting an end suction, flexibly coupled pump to the baseplate. These approaches vary by manufacturer, with each manufacturer typically standard-

izing one approach or another. Some manufacturers do build pumps with both configurations.

FOOT MOUNTED CASING

In this approach, the casing (or volute) has a foot connected directly to it, and the foot is bolted directly to the baseplate. Depending on the manufacturer, the foot may be integrally cast into the casing or bolted onto it. The bearing frame is bolted to the casing and is supported through those bolts, typically with some support at the shaft (inboard) end. *Figure 1* illustrates this approach.

FOOT MOUNTED FRAME

In this approach, the casing is not supported from below. Instead, the bearing frame itself is footed and attached to the baseplate, and the casing bolted to the frame. The bearing frame supports the pump. Typically, a single foot is used, and this foot is integrally cast into the frame; some manufacturers use one or two "bolt-on feet." *Figure 2* illustrates this approach.

FOOT MOUNTED CASING: ADVANTAGES AND DISADVANTAGES

ADVANTAGES

The four chief advantages of this mounting configuration are:

1. The casing can serve as support for the piping. As previously mentioned, using a casing as support is to be avoided, especially when the volute is cast of grey iron. This method does provide some support for those systems not installed or piped in accordance with HI or manufacturer's recommendations.
2. The casing will remain in exactly the same location upon removal of the frame during disassembly and repair. By tying the casing directly to both the piping and the baseplate, the casing will be "locked in place" when the rotating assembly is removed.
3. Some standards require it. For purposes of product standardization and replacement

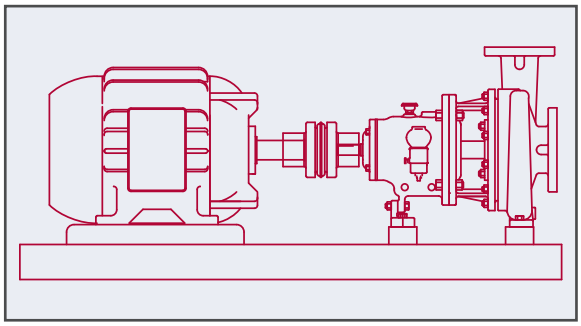

Figure 1. *A Pump with a Foot Mounted Casing*

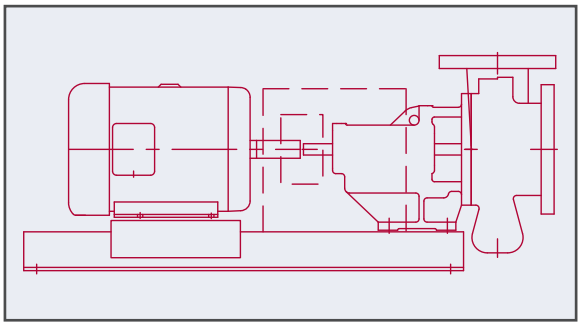

Figure 2. *A Pump with a Foot Mounted Frame*

pump availability; for example, ANSI standard B73 dictates a foot mounted support for industrial process pumps.

4. Cost reduction. Since the casing is already a relatively large casting, the addition of a small foot does not appreciably impact the cost. Since the frame is not footed and offers no support to the pump, the size of that casting can be dramatically reduced.

   The addition of the "shaft end" support on the frame is accomplished via a typically inexpensive bolt-on piece of steel or iron, as illustrated in *Figure 1*.

DISADVANTAGES

Several disadvantages are associated with this configuration:

1. Alignment can be more difficult. Since there is a support at the casing and a separate one at the back of the frame, both surfaces must be aligned to the motor.

   While the typical IOM will indicate that only the motor is to be moved, it can be expected that the pump will have moved on the bedplate either during transit or during the handling process at installation.

   As there are two surfaces on the pump needing alignment, and one on the motor, this creates a "three point" contact area and may require extra steps and shimming to correct.

2. Thermal expansion may cause loading of the bearing/seal and shorten MTBF. The support on the casing serves as a part of the heat dissipation system for fluids in the casing, and may be insulated as a normal condition in HVAC systems. The rear support is subject to atmospheric conditions in the mechanical room and bearing heat changes.

   As a result, each of the two mounting areas will be subject to different temperatures and temperature changes throughout the operating life of the pump. This will cause them to expand and contract independently and individually, which in turn will impose loads onto the bearings, seals, and wear surfaces – possibly hastening wear and failure of the pump.

3. Stacking tolerances can cause difficulty with internal alignment and shorten MTBF. The casing foot and backplate fit form the base to which the seal insert is affixed, while the bearing frame is machined from an entirely different piece.

   Therefore, the machining tolerances of each piece (and ALL fits) must be taken into account to assure alignment of the shaft to the baseplate, the bearings to the seal and casing, and the impeller to the casing.

   ANSI Standard Y14.5M is the machining standard most manufacturers use. This standard will typically allow .002 in. to .004 in. (or more) per fit. If the foot and volute, backplate, seal housing, frame, bearing, and rear support fits are each within tolerance of the standard, these tolerances can stack up and lead to premature failure.

4. No support exists below the bearing frame. Upon removal of the rotating assembly, damage to components or personal injury may occur. Without the support under the frame, the front of the rotating assembly will drop dramatically once (a) the rotating removal has started (utilizing back pullout), and (b) the impeller eye area is pulled out of its position within the case.

   Damage to the impeller (usually at the eye and at the outlet edge of the vanes) can happen as a result. Unless care is taken, this can also pinch the hand of the person doing the disassembly between the impeller and volute.

5. When removed, there is no longer support for the frame, and inspection, repair, or replacement of the frame's components (or pieces attached to the frame) may be complicated and extend downtime.

6. The rotating assembly re-insertion into the casing may also prove difficult, and damage

to the component or delay may result. This is because there is no support to the frame to ensure that the frame and casing line up exactly so the impeller can be slid into the suction area.

7. Identical models of pumps in frame mounted or close coupled designs will use different volutes, though each construction may exhibit different actual operating characteristics in performance based on pattern wear and tear.

   Changing a pump from frame mounted to close coupled will require a different volute be placed in the piping.

8. The discharge must always be mounted vertically because the volute is mounted at the bottom of the casing, 180° opposite the discharge. Rotating the discharge relative to the baseplate or installation's piping is not possible.

FOOT MOUNTED CASING: OVERCOMING THE DISADVANTAGES

While the alignment and stacking tolerances can be overcome, or issues mitigated, with extra care, time, and practice, other issuues may need further discussion.

Thermal Expansion

Little can be done to overcome thermal expansion. Care should be taken to assure that the foot is not insulated; however, this effort may not have much impact. Removal of the rear support may be possible; if so, the pump manufacturer should be contacted to determine whether this is acceptable or not.

Realignment of the pump after it has been running and the temperature stabilized – as recommended by HI – will help, and alignment checks are recommended as part of a preventative maintenance program.

Removal of the Frame and Re-installation

Obstacles can be relatively easy to overcome:

- A second person might assist in the disassembly, depending on the size and/or weight of the frame and rotating assembly.

  While this option may add an extra expense to the overall maintenance costs, it will reduce damages and the potential for injury.

- An overhead crane, chain hoist, or A-frame (portable chain hoist) may be used to steady the frame on removal and prevent the dropping.

Support of the Frame During Inspection/Repair

This type of support can be easily accomplished through several approaches, such as leaving the assembly on the hoist, standing the frame on end (with support), or, most commonly, building a cradle out of wood into which the frame is nestled and steadied.

Performance Issues

Nothing needs to done in regard to potential performance issues. The pump manufacturer will have the responsibility to ensure that performance is within HI standards. Adjustments to performance, if required, will be made during the engineering/production cycle.

Piping Arrangements

No further adjustments need to be made as they are made during the design phase. If it is desired that the discharge be horizontal or downward, without piping and elbowing, alternate pumps are indicated.

FOOT MOUNTED FRAME: ADVANTAGES AND DISADVANTAGES

ADVANTAGES

Several advantages are found with this configuration:

1. The entire frame supports the entire pump, directly from below the rotating contact points (bearings). The pump's axial and radial loads are transferred to the bearings, and the loads on the bearings are transmitted to the housing.

   With this approach, transferring these loads down to the baseplate, rather than back to the housing and piping, can be ensured.

2. The installation allows for flexibility. Because the volute has not feet and does not require additional support, it can be rotated to allow discharge in positions other than vertically: out the top side, the bottom side, or straight down (which the installation requires) – without the need for external piping to change directions.
3. The frame, by necessity, must be of heavy duty construction, having more mass, because it supports the pump weight and serves as a bearing housing. The mass will help to dissipate heat, lowering the temperature at the bearing races.
4. Single-piece machining is yet another advantage to this configuration. The feet and bearing bore are located in the same casting, and the two areas can be machined together as a single piece of machinery.

   Alignment between the bearing bore and the feet is ensured and not dependent on any assembly process; there are also fewer stacking tolerances.
5. Thermal expansion issues are minimized. Both the pump and motor supports are exposed to the same atmospheric conditions, so the entire assembly will expand and contract as one, eliminating the problems which otherwise may occur.
6. With this configuration, two-point alignment can be accomplished. With no separate front and back supports, the frame can be aligned with the motor more easily. Following pump repair, the assembly can be slid back where it belongs and simplifying re-alignment.
7. Here, the rotating assembly is supported, and the entire frame can be pulled backwards, providing true back pullout disassembly.

   Since the rotating assembly is supported, there will be no dropping in the rotating assembly during removal, as is the issue with a case mounted configuration.
8. The frame forms a steady work environment, and removal of the impeller and seal from the frame is simplified, without the need for external cradles or lifting devices.
9. The rotating assembly can be slid into the volute without external support, reducing time and expenses.
10. Consistency of like products from the same manufacturer helps to ensure identical hydraulic characteristics, regardless of configuration. While this does not necessarily impact maintenance costs, it does benefit the designer.

    The same volute can be used for close coupled and frame mounted units since the volute has no support feet. If a change from a close coupled to frame mounted design is desired, then the volute may be reused and left in the piping.

DISADVANTAGES

1. The cost of the frame itself – not necessarily the whole pump – is more expensive than if there were no feet.
2. If the piping has not been properly supported, the volute may move with the piping if the frame is removed, which may cause difficulties with re-insertion.

FOOT MOUNTED CASING: OVERCOMING THE DISADVANTAGES

Below are some approaches for overcoming the disadvantages that are associated with a foot mounted casing.

1. Overall, the relative cost of the machine is generally not as high as the cost of a frame with feet, as a percentage. The additional costs of cast materials are offset by lower machining costs and simplified assembly. Also, the ability to use the same casing in both close coupled and frame mounted configurations allow for increased volume and decreased per-piece costs.
2. The solution for volute movement upon rotating assembly removal is to not let it happen. How? By supporting the piping so there is no

movement. However, even in the best cases, piping that was properly installed and supported originally may have moved or shifted with time. In this event, there are two approaches:

(a) Use the pump design to assist in adjusting improper installation back to proper. First, prior to disassembly, disconnect the coupling. Second, loosen the capscrews that attach the pump to the baseplate. If there is significant pipe strain, the assembly will move.

Leaving the pipe assembled, adjust the piping until the unit moves back where it belongs. If this can not be accomplished prior to disassembly, it can be done prior to reassembly by moving the pump as close as practical to the volute and adjusting the piping until it can be slipped into place.

(b) If the first approach is not used, then this approach may be utilized. During the removal of the rotating assembly, use external supports under the casing. These supports can be wooden blocks, jacks, etc. Put the support snugly against the bottom of the volute.

The support will hold the volute in place when the frame is removed. This support works well if the piping loads downward, which is most often the case. While not as properly correct as the first approach, it is quick.

CONCLUSION

Proper selection of pumps, materials, piping, and installation are of primary importance in decreasing maintenance costs, minimizing MTBF, reducing downtime, and extending the life of the pump. The proper mounting configuration can help significantly in these areas.

Regardless of whether it's a footed case or footed frame configuration, both have advantages and disadvantages. In almost all cases, the disadvantages associated with either approach can be overcome.

USA
GRUNDFOS Pumps Corporation
17100 West 118th Terrace
Olathe, KS 66061
Phone: (913) 227-3400
Telefax: (913) 227-3500

USA
PACO Pumps – National Headquarters
Grundfos CBS Inc.
902 Koomey Road
Brookshire, TX 77423
Phone: (800) 955-5847
Telefax: (800) 945-4777

CANADA
GRUNDFOS Canada Inc.
2941 Brighton Road
Oakville, Ontario
L6H 6C9
Phone: (905) 829-9533
Telefax: (905) 829-9512

MEXICO
Bombas GRUNDFOS de Mexico S.A. de C.V.
Boulevard TLC No. 15
Parque Industrial Stiva Aeropuerto
C.P. 66600 Apodaca, N.L. Mexico
Phone: 011-52-81-8144 4000
Telefax: 011-52-81-8144-4010

L-CBS-WP-04 • Rev. 08/09 (US)