LFE, LCSE

End suction frame-mounted pumps with integrated VFD
End suction split coupled pumps with integrated VFD

Installation and operating instructions

be
think
innovate

GRUNDFOS

Original installation and operating instructions.

CONTENTS

1. Pump information

2. Symbols used in this document

The following symbols may be used in this document.

Warning

If these safety instructions are not observed, it may result in personal injury.

Warning

If these instructions are not observed, it may lead to electric shock with consequent risk of serious personal injury or death.

Warning

When pumping hazardous liquids, special attention must be paid to the risk of personal injury.

Warning

The surface of the product may be so hot that it may cause burns or personal injury.

Warning

The sound pressure level is so high that hearing protection must be used.

Caution

If these safety instructions are not observed, it may result in malfunction or damage to the equipment.

Note

Notes or instructions that make the job easier and ensure safe operation.

3. Limited warranty

Products manufactured in this manual by GRUNDFOS CBS INC. (Grundfos) are warranted to the original user only to be free of defects in material and workmanship for a period of 24 months from date of installation, but not more than 30 months from date of manufacture. Grundfos' liability under this warranty shall be limited to repairing or replacing at Grundfos' option, without charge, F.O.B. Grundfos' factory or authorized service station, any product of Grundfos' manufacture. Grundfos will not be liable for any costs of removal, installation, transportation, or any other charges which may arise in connection with a warranty claim.

Products which are sold but not manufactured by Grundfos are subject to the warranty provided by the manufacturer of said products and not by Grundfos' warranty. Grundfos will not be liable for damage or wear to products caused by abnormal operating conditions, accident, abuse, misuse, unauthorized alteration or repair, or if the product was not installed in accordance with Grundfos' printed installation and operating instructions. To obtain service under this warranty, the defective product must be returned to the distributor or dealer of Grundfos' products from which it was purchased together with proof of purchase and installation date, failure date, and supporting installation data. Unless otherwise provided, the distributor or dealer will contact Grundfos or an authorized service station for instructions. Any defective product to be returned to Grundfos or a service station must be sent freight prepaid; documentation supporting the warranty claim and/or a Return Material Authorization must be included if so instructed.

GRUNDFOS WILL NOT BE LIABLE FOR ANY INCIDENTAL OR CONSEQUENTIAL DAMAGES, LOSSES, OR EXPENSES ARISING FROM INSTALLATION, USE, OR ANY OTHER CAUSES. THERE ARE NO EXPRESS OR IMPLIED WARRANTIES, INCLUDING MERCHANTABILITY OR FITNESS FOR A PARTICULAR PURPOSE, WHICH EXTEND BEYOND THOSE WARRANTIES DESCRIBED OR REFERRED TO ABOVE.

Some jurisdictions do not allow the exclusion or limitation of incidental or consequential damages and some jurisdictions do not allow limit actions on how long implied warranties may last. Therefore, the above limitations or exclusions may not apply to you. This warranty gives you specific legal rights and you may also have other rights which vary from jurisdiction to jurisdiction.

Warning

Prior to installation, read these installation and operating instructions. Installation and operation must comply with local regulations and accepted codes of good practice.

Warning

The use of this product requires experience with and knowledge of the product. Persons with reduced physical, sensory or mental capabilities must not use this product, unless they are under supervision or have been instructed in the use of the product by a person responsible for their safety. Children must not use or play with this product.

4. Symbols used in this document

Warning

If these safety instructions are not observed, it may result in personal injury.

Caution

If these safety instructions are not observed, it may result in malfunction or damage to the equipment.

Note

Notes or instructions that make the job easier and ensure safe operation.

Warning

The surface of the product may be so hot that it may cause burns or personal injury.

5. Installation - Mechanical

Read these instructions thoroughly before installing and operating your Grundfos Type LFE and LCSE Centrifugal Pump. Successful operation depends on careful attention to the procedures described in Sections 1, 2, 3 and 4 of this manual. Keep this instruction manual handy for future use.

5.1 Pump identification

All Grundfos Type LFE and LCSE Pumps are identified by Catalog and Serial Numbers (LFE nameplate shown). These numbers are stamped on the pump nameplate (fig. 1) affixed to each pump volute casing, and should be referred to in all correspondence with the Company.

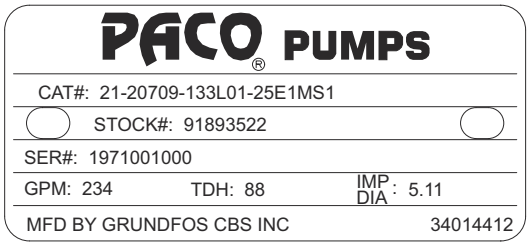

TM 06 1036 1414

Fig. 1 Nameplate

5.2 Receiving

- Check pumping unit for shortage and damage immediately upon arrival. Pump accessories when required are packaged in a separate container and shipped with the unit.
- If equipment is damaged in transit, promptly report this to the carrier's agent. Make complete notations on the freight bill to speed satisfactory adjustment by the carrier.
- Unload and handle the unit with a sling. Do not lift unit by eye bolts on the motor!

5.3 Temporary storage

- If pump is not to be installed and operated soon after arrival, store it in a clean, dry area of moderate ambient temperature.
- Rotate the shaft by hand periodically to coat bearing with lubricant to retard oxidation and corrosion.
- Follow motor manufacturer's storage recommendations where applicable.

- During storage/transport maintain ambient temperature between -13 to 158 °F (-25 to +70 °C) for the E-motor. At low temperatures below the prescribed temperature the E-motor should be equipped with a anti-condensation heater. This could be an external heating element or an incorporated functionality of the E-motor. See specific sections for anti-condensation heater solutions.

5.4 Location

- Locate the pump as close to the suction supply as possible. Use the shortest and most direct suction piping practical. Refer to section *5.8 Suction (inlet) piping*.
- Locate the pump below system level wherever possible. This will facilitate priming, assure a steady liquid flow, and provide a positive suction head.
- Make sure sufficient NPSH (Net Positive Suction Head) is provided at the suction end by considering the pump's location in relation to the entire system. Available NPSH must always equal or exceed required NPSH specified on the pump performance curve.
- Always allow sufficient accessibility for maintenance and inspection. Provide a clear space with ample head room for use of a hoist strong enough to lift the unit.
- Make sure a suitable power source is available for the pump motor. Electrical characteristics should match those specified on the motor data plate, within the limits covered in the sections *6. Installation-electrical* and *7. Operation*.
- Avoid pump exposure to sub-zero temperatures to prevent pump liquid from freezing. If freezing conditions exist during shutdown periods, see Sections *7.6 Pump shutdown* and *7.7 Short duration shutdown* for specific recommendations.

5.5 Horizontal pump foundation

Horizontal pumps should be permanently installed on a firm, concrete foundation mounting pad of sufficient size to dampen any vibration and prevent any deflection or misalignment. The pad may float on springs or be a raised part of the equipment room floor. The foundation should be poured without interruption to 3/4 to 1 1/2 inches below the final pump elevation. The top surface should be well scored or grooved before the concrete sets to provide a suitable bonding surface for the grout. Anchor bolts should be set in pipe sleeves for positioning allowance, as shown in fig. 2. Allow enough bolt length for grout, lower base plate flange, nuts and washers. Allow the foundation to cure several days before proceeding with pump installation.

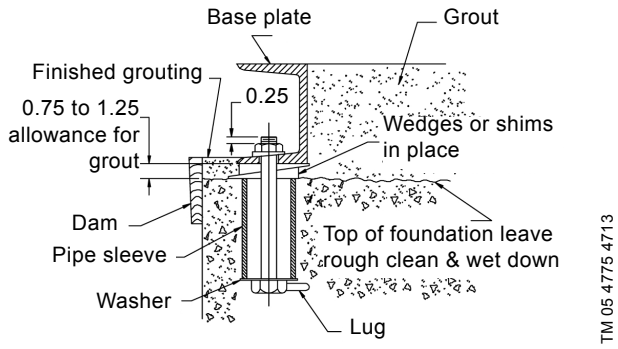

Fig. 2 Anchor bolt installation

5.6 Securing base plate

- After the concrete pad has been poured and set, lower the pump base plate over the anchor bolts and rest it on loose adjustment wedges or shims placed near each anchor bolt and at intervals not to exceed 24" along each side. Shims or wedges must be placed to raise the bottom of the base 3/4" to 1 1/4" above the pad, allowing clearance for grout. Level the pump shaft, flanges, and base plate using a spirit level, adjusting the wedges or shims, as required.
- Check to make sure that the piping can be aligned to the pump flanges without placing any strain on either flange.
- After pump alignment has been established (LFE), put nuts on foundation bolts and tighten them just enough to keep the unit base plate from moving. Construct a form or dam around the concrete pad and pour grout in and around the pump base, as shown in fig. 2. Grout compensates for uneven foundation, distributes the weight of the unit, and prevents shifting. Use an approved, non shrinking grout (such as Embeco 636 by Master Builders, Cleveland, Ohio or equivalent). Allow at least 24 hours for this grout to set before proceeding with piping connections.
- After the grout has thoroughly hardened, check the foundation bolts and tighten if necessary. Recheck the pump alignment after the foundation bolts are secured.
- No alignment or grouting required for LCSE pumps.

5.7 Piping-general

- Do not use pump as a support for piping! Use pipe hangers or other supports at proper intervals to provide complete piping support near the pump.
- Both suction and discharge piping should be independently supported and properly aligned so that no strain is transmitted to the pump when flange bolts are tightened.
- Make sure piping is as straight as possible, avoiding unnecessary bends and fittings. Where necessary, use 45 ° or long-sweep 90 ° pipe fittings to decrease friction loss.
- Where flanged joints are used, make sure that inside diameters properly match and mounting holes are aligned.
- Do not spring or force piping when making any connections!

5.8 Suction (inlet) piping

The sizing and installation of suction piping is particularly important. It must be selected and installed in a manner that minimizes pressure loss and permits sufficient liquid flow into the pump during starting and operation. Many NPSH problems can be traced directly to improper design of suction piping systems. Observe the following precautions when installing suction piping:

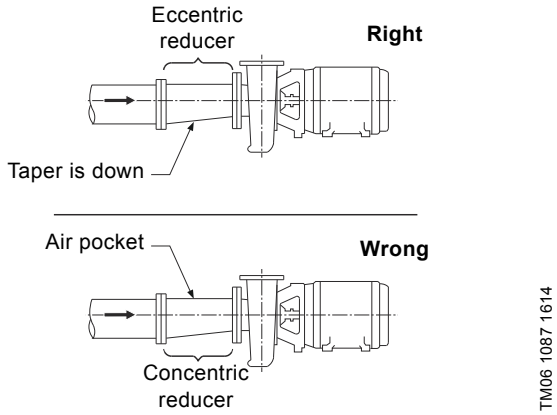

Fig. 3 Inlet piping

- Suction piping should be as direct as possible, and ideally the length should be at least ten times the pipe diameter. Short suction piping can be the same diameter as the suction opening. Longer piping should be one or two sizes larger (depending on length), reducing to the diameter of the pump suction opening.
- Use an eccentric reducer, with the eccentric side down fig. 3 when reducing the pipe diameter to the diameter of suction opening.
- At no point should suction piping be smaller in diameter than the pump suction opening.
- Horizontal suction lines should follow an even gradient, if possible. A gradual upward slope to the pump is recommended for suction lift conditions, and a gradual downward slope for positive suction head.
- Avoid any high points, such as pipe loops fig. 4, that may create air pockets and throttle the system or produce erratic pumping.
- Install a valve in the suction line to isolate the pump during shutdown and maintenance, and facilitate pump removal. Where two or more pumps are connected to the same suction line, install duplicate gate valves to isolate each pump from the line.
- Gate valves should always be installed in positions that avoid air pockets. Globe valves should not be used, particularly when NPSH is critical.
- During pumping operation, valves on suction line must always be at FULL OPEN.
- Properly sized pressure gauges can be installed in gauge taps on pump suction and discharge nozzles. Gauges enable the operator to monitor pump performance and determine that the pump conforms to the parameters of the performance curve. If cavitation, vapor binding, or other unstable operation occurs, pressure gauges will indicate wide fluctuation in suction and discharge pressures.

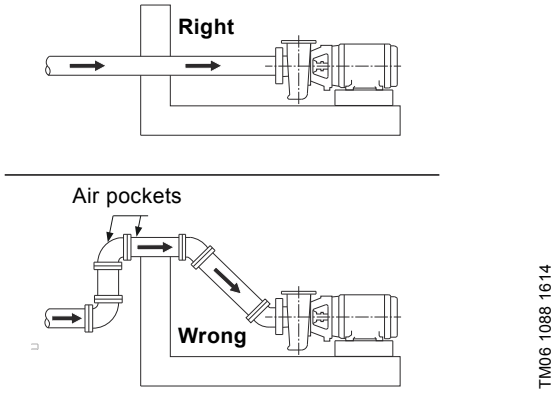

Fig. 4 Air pocket prevention

5.9 Discharge (outlet) piping

- Short discharge piping can be the same diameter as the pump discharge opening. Longer piping should be one or two sizes larger depending on length.
- An even gradient is best for long horizontal runs of discharge piping.
- Install a valve near the discharge opening to prime and start the pump. The discharge gate valve is also used to isolate the pump during shutdown, maintenance, and facilitate pump removal.
- Any high points in discharge piping may entrap air or gas and thus retard pump operation.
- If the possibility of liquid hammer exists, (i.e. check valves are used) close the discharge gate valve before pump shutdown.

5.10 Shaft sealing-general comments

- Grundfos offers both mechanical seals and packed stuffing boxes as a means to seal the shaft. Pumps with stuffing boxes are normally packed before shipment. If the pump is installed within 60 days after shipment, the packing material will be in good condition for operation with a sufficient supply of lubrication. If the pump is stored for a longer period, it may be necessary to repack the stuffing boxes.
- The stuffing box must be supplied at all times with a source of clean, clear liquid to flush and lubricate the packing. When pumps are equipped with mechanical seals, no maintenance or adjustment is required. Mechanical seals are preferred to packing on most applications because they require less maintenance.

5.11 Packing gland adjustment

With the pump running, the packing gland should be adjusted to permit 40 to 60 drops per minute leakage. This is required for shaft lubrication. After initial start up, additional packing and adjustment may be required. Pumps with mechanical seals require no adjustment.

5.12 Mechanical seals

Grundfos Type LFE and LCSE pumps that are equipped with mechanical seals are matched to conditions for which the pump was sold. Observe the following precautions to avoid seal damage and obtain maximum seal life:

- Do not exceed temperature or pressure limitations for the mechanical seal used.
- DO NOT RUN THE PUMP DRY OR AGAINST A CLOSED VALVE! Dry operation will cause seal failure within minutes.
- Clean and purge suction piping in new installations before installing and operating pump. Pipe scale, welding slag and other abrasives can cause rapid seal failure.

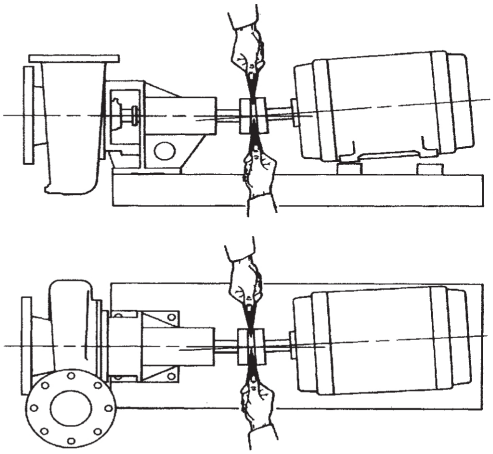

TM05 4795 2613

Fig. 5 Checking parallel alignment

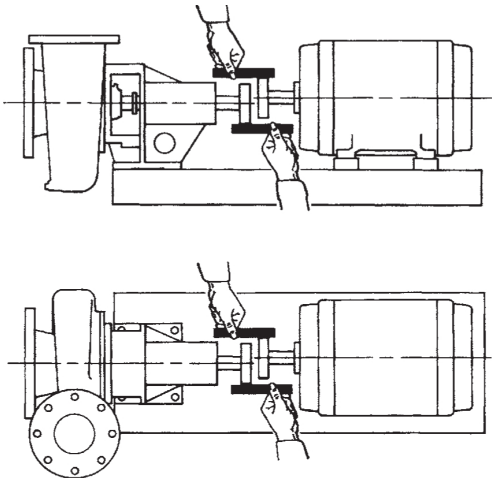

TM05 4794 2613

Fig. 6 Checking alignment

5.13 Coupling alignment (LFE)

- The following anchoring and alignment procedure is typical and, if performed with care, should result in a smooth running, trouble-free installation.
- If the pump and motor were shipped mounted on the pump base as an assembly, remove the coupling guard.
- The pump and motor were accurately aligned at the factory, but handling during shipment usually alters this pre-alignment. Using a small straight edge and feeler gauges or a dial indicator, check for horizontal, vertical, and angular misalignment of the coupling hubs figures 5 and 6.
- Coupling alignment is correct when the dial indicator reads no more than .005" run out in any direction (or when the straight edge contacts both hubs evenly in both horizontal and vertical positions). If misalignment is detected, loosen the motor and shift or shim as necessary to re-align, then re-tighten bolts. Always align the motor to the pump as piping strain will occur if the pump is shifted. Never reposition pump on base!
- After final piping connections to the pump have been made, motor wiring compared, correct rotation has been established, and piping filled with liquid, check shaft alignment once again.
- Leave the coupling guards off until the pump priming procedure is completed for a final shaft alignment check.
- To protect personnel from rotating machinery, Always install coupling guards after installation is complete; before starting pump!

5.14 Coupling alignment (LCSE)

- No alignment of the pump and motor is required.

6. Installation-electrical

Warning

Use only qualified electricians for electrical installation and maintenance.

Refer to manuals provided with electrical accessory components and disconnect power supply as recommended for servicing.

Warning

Never do maintenance work when the unit is connected to power.

6.1 Motors general

The motor control circuit must have the following components in order to comply with the National Electrical Code.

- Motor Disconnecting Device: A motor disconnecting device must be installed that is capable of disconnecting both the controller (motor starter) and the motor from their source of power.
- The disconnecting device must be located so that the controller (motor starter) can be seen from the disconnecting means. In all cases, the distance from the disconnecting device to the controller must be less than 50'.
- In most installations the disconnecting device will be a circuit breaker or fusible disconnect switch.

Motor short circuit and ground fault protection:

- Short circuit and ground fault protection are usually provided by means of a circuit breaker or fusible disconnect switch.
- The selection of the size of the circuit breaker or fuse must be in accordance with Section 430-52 and Table 430-152 of the National Electrical Code.

Motor controller with running over current protection (magnetic starter):

- These components must be installed in accordance with applicable local and state electrical codes in addition to the National Electrical Code.

Warning

Whenever powered equipment is being used in explosive surroundings, the rules and regulations generally or specifically imposed by the relevant responsible authorities or trade organizations must be observed.

7. Operation

7.1 Priming

- Grundfos Type LFE and LCSE pump is not self-priming, and must be completely primed (filled with liquid) before starting.
- If the pump will operate with a positive suction head, prime by opening the suction valve and allowing liquid to enter pump casing. Open air vents at this time, and make sure all air is forced from pump by liquid before closing.
- Rotate the shaft by hand to free entrapped air from impeller passageways.
- If pump has a suction lift, priming must be accomplished by other methods. The use of foot valves or ejectors, or manual filling of the pump casing and suction line with liquid are possible methods suggested for this purpose.

Caution ***Never run the pump dry in the hope that it will prime itself! Serious damage to the shaft seals, pump wear rings and shaft sleeves will result.***

7.2 Pre-start checklist

Warning

In the interest of operator safety, the unit must not be operated above the nameplate conditions. Such operation could result in unit failure causing injury to operating personnel. Consult instruction book for proper operation and maintenance of the pump and its supporting components.

Make the following inspections before starting your Grundfos Type LFE and LCSE pump:

1. Make sure the suction and discharge piping has been cleaned and flushed to remove dirt and debris before operating pump.
2. Double check rotation must be clockwise operating in reverse will destroy the impeller and shaft.
3. Make sure all wiring connections to the motor (and starting device) match the wiring diagram and produce clockwise rotation as viewed from the back of the motor.
4. If the motor has been in storage for an extended length of time, either before or after installation, refer to motor instructions before starting.
5. Check the voltage, phase, and line circuit frequency with the motor nameplate. Turn rotating element by hand to make sure it rotates freely.
6. Tighten plugs in gauge and drain taps. If the pump is fitted with pressure gauges, keep gauge clocks closed when not in use.
7. Check suction and discharge piping for leaks, and make sure all flange bolts are securely tightened.

7.3 Motor rotation

Caution ***Never check driver rotation unless pump and driver couplings are disconnected and physically separated. Failure to follow this instruction can result in serious damage to pump and driver if rotation is wrong.***

7.4 Starting the pump

Warning

The pump must not be operated without an approved coupling guard in place. Failure to observe this warning could result in injury to operating personnel.

1. Install coupling guard on coupled units.
2. Fully open gate valve (if any) in suction line, and close gate valve in discharge line.
3. Fill suction line with liquid and completely prime pump.
4. Start the motor (pump).
5. Immediately make a visual check of pump and suction piping for pressure leaks.
6. Immediately after pump reaches full operating speed, slowly open the discharge gate valve until complete system flow is achieved.
7. Check discharge piping for pressure leaks.
8. If pump is fitted with pressure gauges, open gauge cocks and record pressure reading for future reference. Verify that the pump is performing in accordance with parameters specified on performance curve.
9. Check and record voltage, amperage per phase, and kilowatts, if a wattmeter is available.

7.5 Voltage regulation

The motor will operate satisfactorily under the following conditions for voltage and frequency variation, but not necessarily in accordance with the standards established for operation under rated conditions:

- The voltage variation may not exceed 10 % above or below rating specified on the motor data plate.
- The frequency variation may not exceed 5 % above or below motor rating.
- The sum of the voltage and frequency variations may not exceed 10 % above or below motor rating, provided the frequency variation does not exceed 5 %.

7.6 Pump shutdown

The following shutdown procedures will apply in most normal shutdowns for the Grundfos Type LFE and LCSE pumps. If the pump will be inoperative for an extended length of time, follow storage procedures in Extended Period Shutdown.

- Always close the discharge valve before stopping the pump. Close the valve slowly to prevent hydraulic shock.
- Cut and lock off power to the motor.

7.7 Short duration shutdown

- For overnight or temporary shutdown periods under non-freezing conditions, the pump may remain filled with liquid. Make sure the pump is fully primed before restarting.
- For short or frequent shutdown periods under freezing conditions, keep fluid moving within the pump casing and insulate or heat the pump exterior to pre vent freezing.

7.8 Extended period shutdown

- For long shutdown periods, or to isolate the pump for maintenance, close suction gate valve. If no suction valve is used and the pump has positive suction head, drain all liquid from suction line to terminate liquid flow into pump suction nozzle. Remove plugs in pump drain and vent taps, as required, and drain all liquid from the pump volute casing.
- If freezing conditions will exist during long shutdown periods, completely drain the pump and blow out all liquid passages and pockets with compressed air. Freezing of pump liquid can also be prevented by filling the pump with antifreeze solution.

8. Maintenance

Warning

Do not attempt any maintenance, inspection, repair or cleaning in the vicinity of rotating equipment. Before attempting any inspection or repair on the pump, the driver controls must be in the "OFF" position, locked and tagged to prevent injury to personnel performing service on the pump. Inspection, maintenance and repair should be performed by trained, qualified personnel only.

8.1 Motor lubrication

Always follow motor manufacturer's lubrication instructions if available, and periodically check grease fittings and drain plugs for leaks. Use the standard lubrication interval, see installation and operating instructions or the lubrication plate on the E-motor. If lubricating instructions do not accompany motor, refer to for recommended lubrication periods.

Recommended Lubrication Periods

Motor RPM	Motor HP	Operating conditions		
		Standard	Severe	Extreme
1750	3.00 - 7.50	3 yrs	1 yr	6 mo
	10-30	1-3 yrs	6 mo - 1 yr	3 mo
above 1750	all hp	6 mo	3 mo	3 mo

Standard conditions:
8 hours per day operation, normal or light loading, clean air, 100 °F, maximum ambient temperature.
Severe conditions:
Continuous 24-hour operation, shock loading or vibration, poor ventilation, 100-150 °F, ambient temperature.
Extreme conditions:
Continuous operation, heavy shock or vibration, dirt or dust in air, extreme ambient temperature.

8.2 Pump lubrication

- Grundfos Type LFE pumps on horizontal bearing frames have bearing that may be sealed for life (requiring no lubrication), regreasable or oil lubricated.

Approved lubricants	
Manufacturer	**Lubricant**
SHELL	DOLIUM® R
EXXON	POLYREX®
CHEVRON	SRI GREASE NLGI 2
	BLACK PEARL - NLGI 2
PHILIPS	POLYTAC™
TEXACO	POLYSTAR RB

- To lubricate regreasable bearings, remove grease drain plug (if any) and filler plug. Add clean ball bearing lubricant until grease appears at drain hole or along shaft. On units with drain hole, all old grease can be purged out ahead of new. In such cases, the drain should be left unplugged for several minutes during pump operation to allow excess grease to be forced out.
- Lubricate bearing frame bearings at intervals of one to three months, depending on severity of environment. Pumps in a clean, dry, moderate temperature (100 °F maximum) environment should be regreased at three month intervals. Too much grease can cause premature bearing failure - do not overgrease.
- On those Grundfos Type LFE Centrifugal End Suction pumps ordered with oil lubricated bearings, fig. 7. A regular oil maintenance program must be enforced. Pumps with oil lubricated bearings are fitted with a transparent reservoir (constant level oiler) that maintains oil level about the centerline of the bearing. When necessary, the oil supply in the reservoir of the constant level oiler must be renewed.
- After the first 200 hours of operation the oil should be changed. To change the oil, remove the drain plug at the bottom of the bearing cover and the filler plug (that also acts as a vent plug) at the top of the housing. After draining oil, replace the fittings and refill with an acceptable oil selected from Table , “List of acceptable Lube oils,” on page 10. After the first oil change, the oil should be changed again at 2000 hours and then at intervals of 8000 hours or once yearly, thereafter.

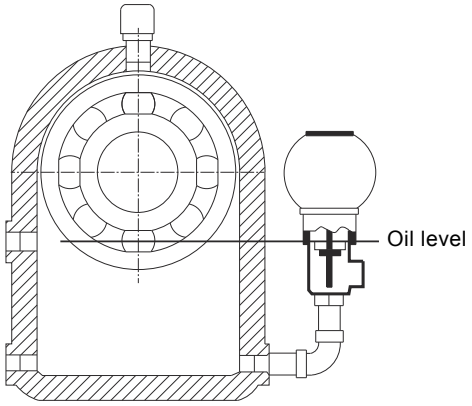

Fig. 7 Oil lubricated bearings

List of acceptable Lube oils	
Lubricant Manufacturer	**Bearing oil brand name**
Aral Refining Co.	Aral Oil CMU
	Aral Oil TU 518
British Petroleum Co.	BP Energol
	TH 100-HB
Calypsol Oil Co.	Calypsol Bison Oil
	SR 25 or SR 36
Standard Oil Co.	Chevron
	Hydraulic Oil 11
	Circulating oil 45
Esso Corp	Esso-Mar 25
	Teresso 47
	Esstic 50
Fina Oil Co.	Fina hydran 34
	Fina Cirkan 32
Gulf Refining Co.	Gulf Harmony 47
	Gulf Paramount 45
Socony Mobil Oil Co.	Vac hlp 25
	Mobulix D.T.E. 25
Shell Oil Co.	Shell Tellus oil 29
Sundco Oil Co.	Sunvis 821
The Texas Co.	Texaco ursa oil P 20
	Dea viscobil sera 4
Wisura Refining Co.	Wisura norma 25 (36)
	Wisura tempo 25 (36)

8.3 Disassembly of pumps

Warning

Depending on the product being pumped, the pump should be washed down before any work is done on it.

Warning

Observe extreme caution when venting and/or draining hazardous liquids. Wear protective clothing in the presence of caustic, corrosive, volatile, flammable, or hot liquids. DO NOT breathe toxic vapors. DO NOT allow sparking, flames, or hot surfaces in vicinity of the equipment.

1. Complete disassembly instructions are outlined below. Proceed only as far as required to perform the maintenance work needed.
2. Turn of power.
3. Drain System. Flush, if necessary.
4. Closed coupled units. Remove motor hold down bolts.

8.3.1 Disassembly of liquid end

1. Remove casing bolts (8B).
2. Remove back pull-out bearing frame assembly (20Y) from casing (1A).
3. Unscrew impeller nut (8A).

Caution ***Do not screwdriver between impeller vanes to prevent rotation. It may be necessary to use a strap wrench around the impeller or shaft to prevent rotation.***

4. Use appropriate size gear puller aligned behind impeller vanes to remove impeller (3A) from shaft (6A).
5. Remove impeller key (12A).
6. Remove back plate bolts (8D). Remove back plate (2K) and seal housing (26P).
7. Place seal housing on flat surface and press out seal seat (14A).
8. If shaft sleeve (5A) requires replacement, it must be evenly heated to approximately 350 °F to loosen locktite. Twist sleeve off shaft (6A).

8.3.2 Disassembly of bearing frame (LFE)

1. Remove slinger (13G).
2. Remove grease seal(s), (14S) if any.
3. Remove bearing house retaining ring (61K).
4. Press or tap on the pump end of the bearing-shaft assembly until one bearing is out.
5. When one bearing is out, remove second retaining ring (61F), then remove complete assembly from bearing housing.
6. Remove shaft retaining ring (61C) and press off bearings.
7. press on new bearings, remember to press only on inner race of bearing while pressing them on.
8. Assemble frame in the reverse procedure used for disassembly.
9. Observe the following when reassembling the bearing frame.
10. Replace lip seals (14S) if worn or damaged.
11. Replace bearings (18A), (18B) if loose, rough or noisy when rotated.
12. Check shaft (6A) for runout at the sleeve (5A) area. Maximum permissible is .002" T.I.R.

8.4 Seal replacement (LCSE)

1. Complete preparations noted.
2. Remove coupling guard (34F).
3. Remove coupling bolts (8E). Pry apart the coupling halves (23D), remove keys (12B) and set aside.

Note ***Mark or measure the original position of the pump coupling on the motor side.***

4. Unscrew tubing connector from pipe tee of air vent assembly. Pipe dope is applied to threads during factory assembly, and resulting bond may retard but will not prevent manual disassembly.
5. Remove seal cap bolts and slide seal cap (2N) up shaft to remove.
6. Remove seal head assembly manually from shaft (6A). Water-soluble lubricant may be applied to shaft to ease removal of shaft seal (14A). Pull seal head assembly manually from shaft, using slight twisting motion (as necessary) to loosen bellows from shaft.
7. Remove and discard seal spring and retainer.
8. remove and discard seal seat from seal cap (2N) and thoroughly clean the inside cavity of seal cap.
9. Interior surface of bellows on new seal head is coated with bonding agent that adheres to motor shaft. When old seal head is removed, bonding agent no longer exists and bellows may crack or split during removal. Installation of new mechanical seal is always recommended if it becomes necessary to remove existing seal from shaft.
10. Clean and lubricate shaft (6A) with water-soluble lubricant and make sure no sharp edges exist to cut or scratch bellows of new seal.
11. Press new seal seat firmly into seal cap. Avoid direct contact of seal face with metallic or abrasive objects and wipe clean after installation to ensure abrasive free sealing surface.
12. Slide new seal head assembly onto shaft by applying even pressure to base of assembly.
13. Install seal cap (2N) down shaft.
14. See reassembly instructions.

8.5 Wear ring replacement

1. Complete preparations
2. Back-pull rotating assembly,
3. It may be necessary to remove volute (1A) from piping, to facilitate easy access to interior of volute. If necessary, remove flange bolts at piping.
4. To remove worn Case Wear Ring (4A), drill two holes slightly smaller than width of ring into exposed edge of ring. Once holes are drilled, a chisel may be used to completely sever ring at holes and break ring into two halves for easy removal.
5. Clean the ring cavity in the volute prior to installing wear ring to ensure a properly aligned fit.
6. To reassemble, press fit new wear ring squarely into volute casing cavity. Ring may be tapped into place to make sure it is completely impressed into cavity.

Caution ***Do not use metal tooling against wear ring surfaces. Use only rubber, rawhide, wood or other soft material to prevent damage to ring.***

8.6 Reassembly of pumps

1. All parts should be cleaned before reassembly.
2. Refer to parts list to identify required replacement items Specify pump serial or catalog number when ordering parts.
3. Reassembly is the reverse of disassembly.
4. Observe the following when reassembling the liquid end:

- All mechanical seal components must be in good condition or leakage may result. Replacement of complete seal assembly is recommended.
- New shaft sleeves are installed by bonding to shaft with hydraulic setting locktite.

5. Re-install coupling guards on coupled pumps.

Warning

Coupling guard must be reinstalled and in place prior to operation.

8.7 Ordering parts

Grundfos Pumps has over 90 years of experience in the design, manufacture, and application of centrifugal pumps and pumping systems. Grundfos's commitment to state-of-the-art pump design and quality manufacturing assures maximum user benefits with optimum equipment life at lower cost.

Grundfos's commitment to their customers continues through an extensive service organization. Highly trained technicians can assist customers with initial startup, troubleshooting, repair, and system analysis.

Grundfos maintains an extensive stock of replacement parts and parts kits for our most popular model pumps. Shipment of these parts is normally made within three days after receipt of an order. On larger pumps, where it is impractical for our factory to inventory low usage parts, replacement parts are normally manufactured and shipped within 15 working days of receipt of an order. In order to reduce pump repair time and shorten inconvenient pump service interruptions, it is suggested that the pump user stock spare parts. For suggested spare parts see Replacement Parts Guide A1b.2, attached, and contact your local Grundfos Sales Representative (see back cover for the number of your nearest Grundfos Sales office). Since spare parts requirements and quantities vary for specific pump constructions, allow your Grundfos Representative to help in defining your spare part requirements. To ensure that the proper replacement parts are ordered for your particular pump model, when you call:

- Identify all pertinent data from the pump name plate (see Pump Identification). This should always include the pump Catalog or Model Number, and the pump Serial Number.
- For replacement impellers, also include from the nameplate the operating conditions (GPM and TDH) and the impeller diameter.
- Identify all parts by item number and description as indicated by the appropriate assembly drawing in this manual, for your particular pump model.

8.8 Type LFE, cross section and parts list

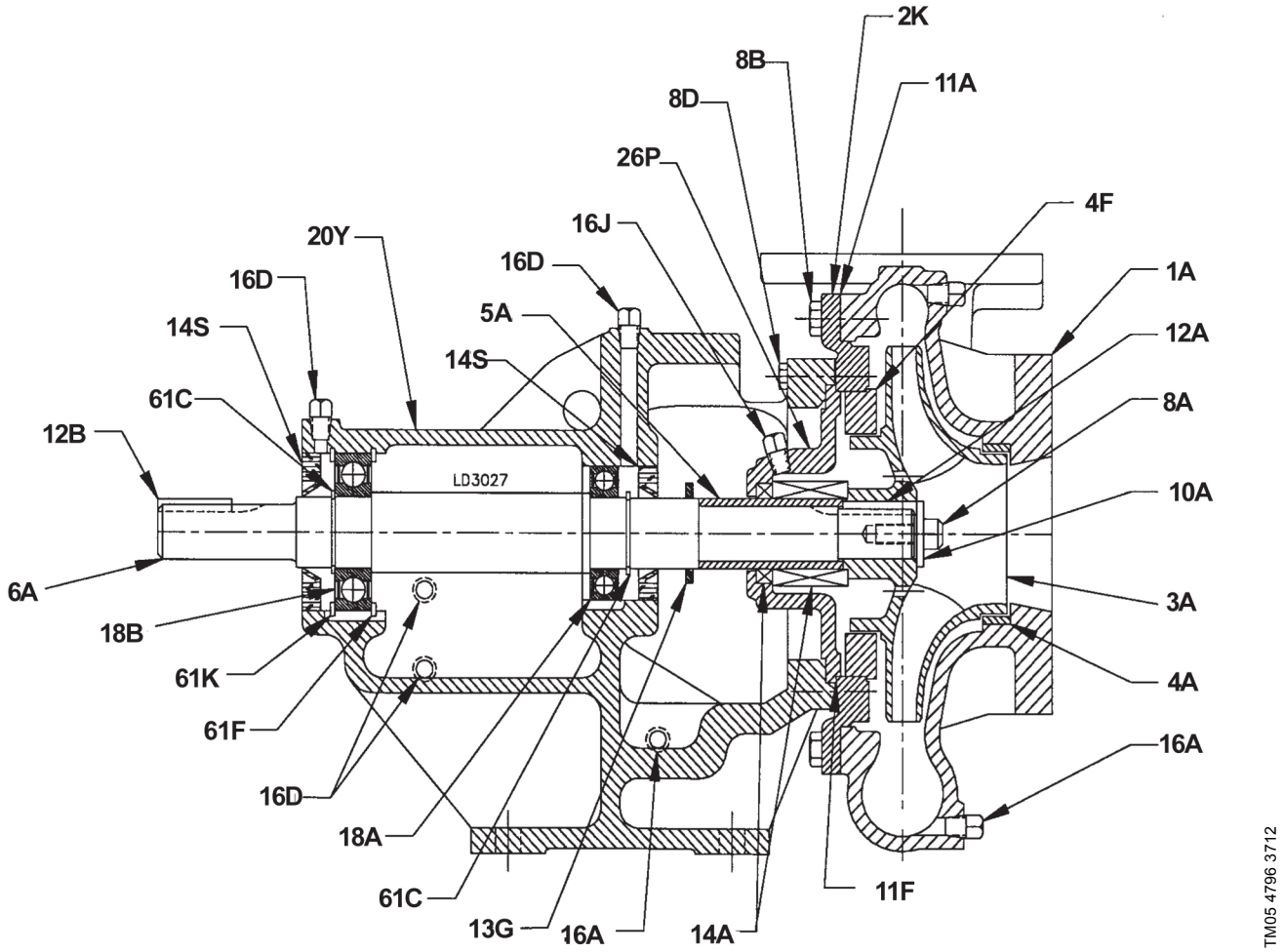

Item No.	Part name	Item No.	Part name	Item No.	Part name
1A	Casing	10A*	Washer, Packing	16L Plug	Seal Chamber
2K	Backplate	10A	Washer, Impeller	18A	Bearing, Inboard
3A	Enclosed Impeller	11A	Gasket, Casing	18B	Bearing, Outboard
4A	Case Wear Ring	11F	Gasket, Backplate	20Y	Bearing Frame
4F**	Balance Ring	12A	Key, Impeller	22A*	Stud, Packing Gland
5A	Shaft Sleeve	12B	Key, Coupling	26P	Seal Housing
5L*	Lantern Ring	13A*	Packing	26U*	Packing Box
6A	Shaft	13G	Slinger	35F*	Nut, Packing Gland
7A*	Packing Gland	14A	Shaft Seal	61C	Snap Ring
8A	Cap Screw, Impeller	14S	Lip Seal	61J*	Snap Ring
8B	Cap Screw, Casing	16A	Plug, Drain		
8D	Cap Screw, Brg. Frame	16D	Plug, Grease/Oil Filter		

* Packed Pumps Only

** If Applicable

8.9 Type LCSE, exploded view and parts list

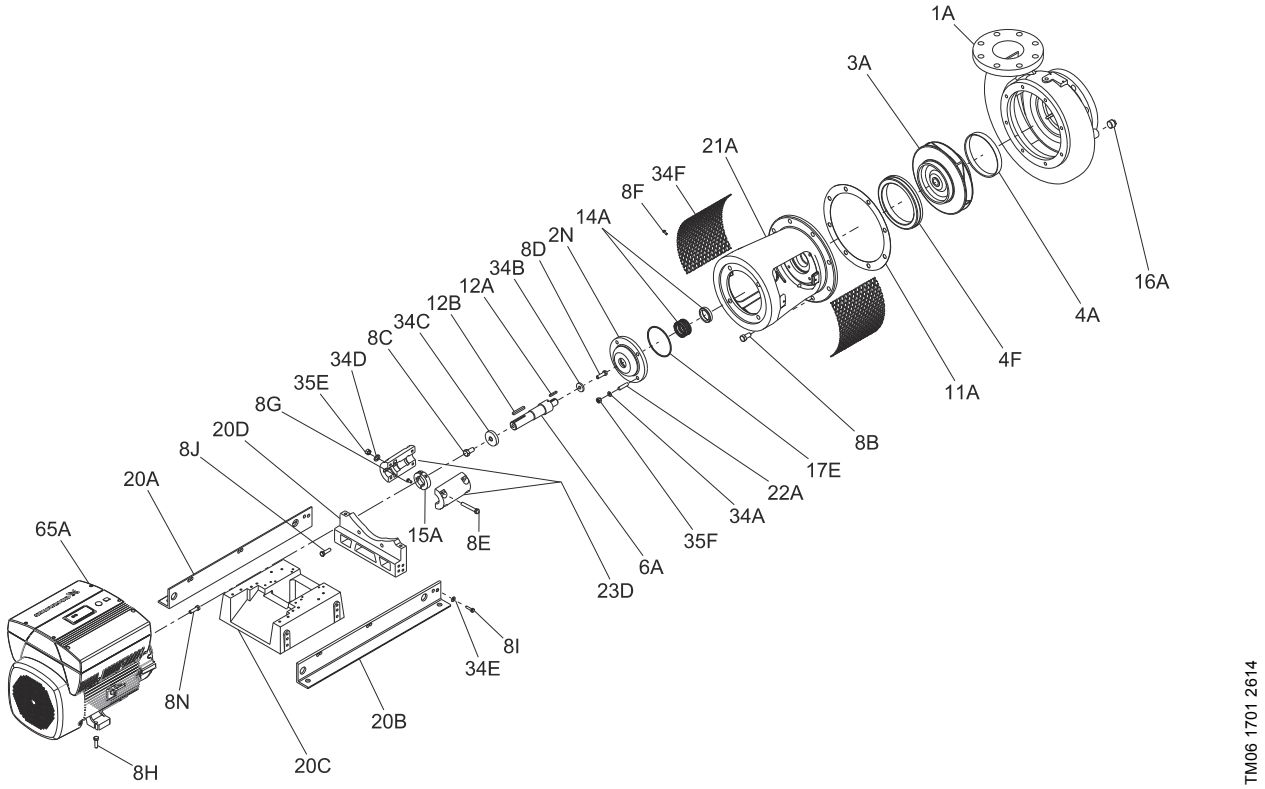

ITEM NO	PART NAME	ITEM NO	PART NAME
1A	VOLUTE	17E	SEAL CAP O-RING
2N	SEAL CAP	20B	BASE RAIL
3A	IMPELLER	20C	MOTOR DECK
4A	CASE WEAR RING	20J	CAST IRON STAND
4F	BALANCE RING	20D	PUMP SUPPORT
6A	PUMP SHAFT	21A	MOTOR BRACKET
8B	VOLUTE SCREW	22A	SEAL CAP STUDS
8C	PUMP SHAFT SCREW	23D	COUPLING HALVES
8E	COUPLING SCREW	24H	BUSHING
8F	COUPLING GUARD SCREW	34B	IMPELLER WASHER
8G	LOCATING RING SCREW	34C	PUMP SHAFT WASHER
8N	MOTOR SCREW	34D	COUPLING WASHER
11A	VOLUTE GASKET	35E	COUPLING NUT
12B	COUPLING KEY	34F	COUPLING GUARD
14A	SEAL ASSEMBLY	35F	SEAL CAP NUT
15A	LOCATING RING	65A	MOTOR
16A	PIPE PLUG		

9. Trouble Shooting

9.1 Symptom

Symptoms	Cause Code
Pump does not deliver any liquid at start-up.	1*2*3*4*5*6*7*8*9*10*11*14*16*17*22*23*24*34
Pump stops delivering liquid after start-up.	2*3*4*5*6*7*8*9*10*11*12*13*22*23*24*34
Pump overheats and/or ceases to deliver liquid.	1*3*9*10*11*21*22*27*29*30*31*33*34*40*41
Insufficient flow rate.	2*3*4*5*6*7*8*9*10*11*14*16*17*20*21*22*23*24*25*26*34
Excessive flow rate.	15*18*20*34
Discharge pressure is too high.	4*14*16*18*20*22*23*24*25*26*34
Shaft seal leaks appreciably, or the packing leaks excessively.	27*28*29*30*33*34*35*36*39*41
Shaft seal or packing fails prematurely.	12*13*27*28*29*30*33*34*35*36*37*38*39*41
Pump uses too much power.	15*16*18*19*20*23*25*27*28*31*33*34*35*37*38*44
Pump runs rough and noisily.	2*3*4*5*6*7*8*9*10*11*15*17*18*21*23*24*27*28*29*30* 31*32*33*34*40*41*42*45*46*
Bearings overheat and/or fail prematurely.	27*28*29*30*31*32*33*34*40*41*42*43*44*45*46

9.2 Possible Causes

1. The pump has not been properly bled of air.
2. The pump suction line have not been completely primed.
3. The suction head (NPSHR) required by the pump is too high, or the net positive suction head available (NPSHA) at your facility is too low.
4. The fluid pumped contains too much entrained air or gas.
5. There are air pockets in the suction line.
6. An entry of air has suddenly occurred in thesuction line.
7. An entry of air past the shaft seal into the pump has occurred.
8. The inlet of the suction line is insufficiently submerged.
9. The suction valve is closed or only partially open.
10. The suction strainer is clogged with dirt or debris.
11. The foot valve is clogged or undersized.
12. Little or no cooling fluid supplied to the shaft seals.
13. The lantern ring is not positioned opposite the flushing inlet thereby restricting fluid flow.
14. Pump drive rotational speed too low.
15. Pump drive rotational speed too high.
16. Pump rotation wrong or impeller installed backwards.
17. Total head of installation (back Pressure) higher than rated total head of the pump.
18. Total head of installation (back Pressure) lower than rated total head of the pump.
19. Density of fluid pumped differs from that specified when the pump was purchased.
20. Viscosity of fluid pumped differs from that specified when the pump was purchased.
21. The pump is operating at too low a rate of flow (The discharge valve may be throttled too much).
22. If pumps are operating in parallel, the pump characteristics may not be suitable for parallel operation.
23. The impeller may be clogged with debris.
24. The impeller may be damaged.
25. The casing and impeller wear rings may be excessively worn.
26. There may be internal leakage from the discharge to the suction compartments as the result of internal gasket failure.
27. There may be a misalignment of the pump shaft.
28. The shaft may chatter because it is bent.
29. The pump may run rough due to improper balancing of the impeller.
30. The shaft may not be running due to worn bearings.
31. The impeller may be rubbing against the inside of the case.
32. The concrete pad might not be of sufficient size to provide pump stability.
33. The pump may have become misaligned during Installation.
34. The operating conditions of the installation do not agree with the data specified when the pump was purchased.
35. The shaft seal may be incorrectly installed, or the stuffing box has not been packed correctly.
36. The shaft sleeve may be scored or pitted in the region of the packing due to dirt or abrasive matter in the flushing fluid.
37. Excessive tightening of the packing gland may block the flushing port thereby diminishing the sealing fluid flow.
38. Packing material may have become wedged or extruded between the shaft and the bottom of the stuffing housing due to excessive clearance on the packing backup washer.
39. The mechanical seal may have been damaged by running dry.
40. There may be excessive axial thrust (side loading) due to improper impeller central alignment.
41. The bearings may be worn.
42. The bearings may have been damaged during installation and/ or dirt or other foreign matter may have entered the bearings during greasing or oiling.
43. Excessive greasing may cause the bearings to overheat.
44. Inadequate lubrication may be causing bearing failure.
45. Dirt may have entered the bearings past the O-Rings.
46. Moisture may have entered the bearing housing causing the bearings to rust.

10. Motor information

11. General description

Grundfos E-pumps have standard motors with integrated frequency converter. The pumps are for single-phase or three-phase power supply connection.

11.1 Pumps without factory-fitted sensor

The pumps have a built-in PI controller and can be set up for an external sensor enabling control of the following parameters:

- pressure
- differential pressure
- temperature
- differential temperature
- flow rate
- liquid level in a tank.

From factory, the pumps have been set to control mode uncontrolled. The PI controller can be activated by means of Grundfos GO and R100.

11.2 Pumps with pressure sensor

The pumps have a built-in PI controller and are set up with a pressure sensor enabling control of the pump discharge pressure.

The pumps are set to control mode controlled. The pumps are typically used to hold a constant pressure in variable-demand systems or differential pressure in closed-loop applications.

11.3 Settings

The description of settings apply both to pumps without factory-fitted sensor and to pumps with a factory-fitted pressure sensor.

Setpoint

The desired setpoint can be set in three different ways:

- directly on the pump control panel
- via an input for external setpoint signal
- by means of Grundfos GO or wireless remote control.

Other settings

All other settings can only be made by means of the Grundfos GO or R100.

Important parameters such as actual value of control parameter, power consumption, etc. can be read via the Grundfos GO or R100.

If special or customized settings are required, use Grundfos PC Tool E-products. Contact your local Grundfos company for more information.

12. Mechanical installation

The pump must be secured to a solid foundation by means of bolts through the holes in the flange or baseplate.

Note ***In order to retain the UL/cUL approval, follow the additional installation procedures on page 47.***

12.1 Motor cooling

To ensure sufficient cooling of motor and electronics, observe the following requirements:

- Make sure that sufficient cooling air is available.
- Keep the temperature of the cooling air below 104 °F (40 °C).
- Keep cooling fins and fan blades clean.

12.2 Outdoor installation

When installed outdoors, the pump must be provided with a suitable cover to avoid condensation on the electronic components. See fig. 8.

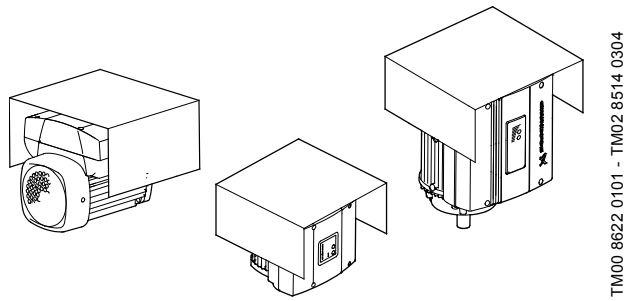

Fig. 8 Examples of covers

Remove the drain plug pointing downwards in order to avoid moisture and water build-up inside the motor.

Vertically mounted pumps are IP55 after removal of the drain plug. Horizontally mounted pumps change enclosure class to IP54.

13. Electrical connection

For description of how to connect E-pumps electrically, see the following pages:

13.1 Three-phase pumps, 3-10 hp, page 17

13.2 Three-phase pumps, 15-30 hp, page 19.

13.1 Three-phase pumps, 3-10 hp

Warning

The user or the installer is responsible for the installation of correct grounding and protection according to current national and local standards. All operations must be carried out by qualified personnel.

Warning

Never make any connections in the pump terminal box unless all electric supply circuits have been switched off for at least 5 minutes.

Note for instance that the signal relay may be connected to an external supply which is still connected when the power supply is disconnected.

The above warning is indicated on the motor terminal box by this yellow label:

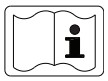

13.1.1 Preparation

Before connecting the E-pump to the power supply, take the issues illustrated in the figure below into consideration.

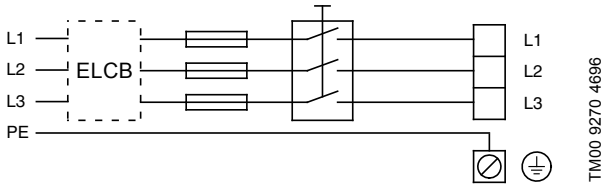

Fig. 9 Power supply-connected pump with power switch, backup fuses, additional protection and protective grounding

13.1.2 Protection against electric shock - indirect contact

Warning

The pump must be grounded in accordance with national regulations.

As the leakage current of 5-10 hp (4 - 7.5 kW) motors is > 3.5 mA, take extra precautions when grounding these motors.

EN 50178 and BS 7671 specify the following precautions when leakage current > 3.5 mA:

- The pump must be stationary and installed permanently.
- The pump must be permanently connected to the power supply.
- The grounding connection must be carried out as duplicate leads.

Protective ground leads must always have a yellow/green (PE) or yellow/green/blue (PEN) color marking.

13.1.3 Backup fuses

For recommended fuse sizes, see section *28.1 Supply voltage* on page 45.

13.1.4 Additional protection

If the pump is connected to an electric installation where an ground leakage circuit breaker (ELCB) is used as additional protection, the circuit breaker must be of a type marked with the following symbols:

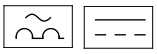
ELCB

This circuit breaker is **type B.**

The total leakage current of all the electrical equipment in the installation must be taken into account.

The leakage current of the motor in normal operation can be seen in section *28.3 Leakage current* on page 44.

During start and at asymmetrical supply systems, the leakage current can be higher than normal and may cause the ELCB to trip.

13.1.5 Motor protection

The pump requires no external motor protection. The motor incorporates thermal protection against slow overloading and blocking (IEC 34-11, TP 211).

13.1.6 Protection against voltage transients

The pump is protected against voltage transients by built-in varistors between the phases and between phases and ground.

13.1.7 Supply voltage and power supply

3 x 440-480 V - 10 %/+ 10 %, 60 Hz, PE.

3 x 208-230 V - 10 %/+ 10 %, 60 Hz, PE.

The supply voltage and frequency are marked on the pump nameplate. Make sure that the pump is suitable for the power supply of the installation site.

The wires in the terminal box must be as short as possible. Excepted from this is the protective ground lead which must be so long that it is the last one to be disconnected in case the cable is inadvertently pulled out of the cable entry.

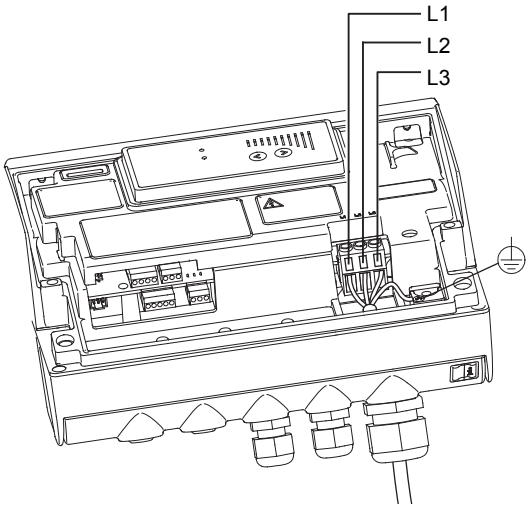

TM03 8600 2007

Fig. 10 Power connection

Cable glands

Cable glands comply with EN 50626.

- 2 x M16 cable gland
- 1 x M20 cable gland
- 2 x M16 knock-out cable entries.

Warning

If the supply cable is damaged, it must be replaced by qualified personnel.

Grid types

Three-phase E-pumps can be connected to all grid types.

Warning

Do not connect three-phase E-pumps to a power supply with a voltage between phase and ground of more than 440 V.

13.1.8 Start/stop of pump

Caution ***The number of starts and stops via the power supply must not exceed 4 times per hour.***

When the pump is switched on via the power supply, it will start after approx. 5 seconds.

If a higher number of starts and stops is desired, use the input for external start/stop when starting/stopping the pump.

When the pump is switched on via an external on/off switch, it will start immediately.

Automatic restart

Note ***If a pump set up for automatic restart is stopped due to a fault, it will restart automatically when the fault has disappeared.***

However, automatic restart only applies to fault types set up to automatic restart. These faults could typically be one of these faults:

- temporary overload
- fault in the power supply.

13.1.9 Connections

Note ***If no external on/off switch is connected, connect terminals 2 and 3 using a short wire.***

As a precaution, the wires to be connected to the following connection groups must be separated from each other by reinforced insulation in their entire lengths:

Group 1: Inputs

- start/stop terminals 2 and 3
- digital input terminals 1 and 9
- setpoint input terminals 4, 5 and 6
- sensor input terminals 7 and 8
- GENIbus terminals B, Y and A

All inputs (group 1) are internally separated from the power-conducting parts by reinforced insulation and galvanically separated from other circuits.

All control terminals are supplied with protective extra-low voltage (PELV), thus ensuring protection against electric shock.

Group 2: Output (relay signal, terminals NC, C, NO)

The output (group 2) is galvanically separated from other circuits. Therefore, the supply voltage or protective extra-low voltage can be connected to the output as desired.

13.1.10 Three-phase pumps, 3-10 hp

Group 3: Power supply (terminals L1, L2, L3)

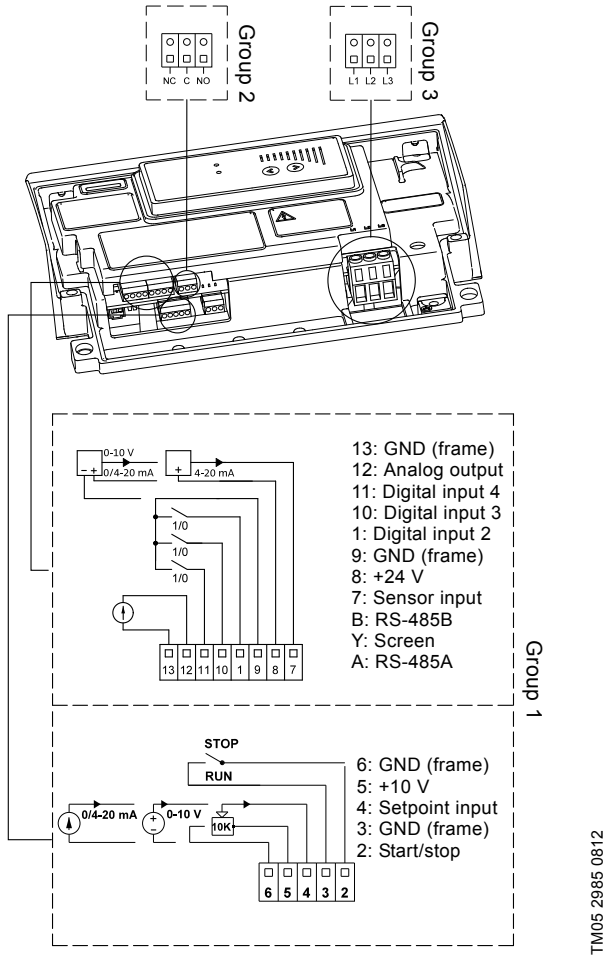

Fig. 11 Connection terminals

A galvanic separation must fulfill the requirements for reinforced insulation including creepage distances and clearances specified in EN 60335.

13.2 Three-phase pumps, 15-30 hp

Warning

The user or the installer is responsible for the installation of correct grounding and protection according to current national and local standards. All operations must be carried out by qualified personnel.

Warning

Never make any connections in the pump terminal box unless all electric supply circuits have been switched off for at least 5 minutes.

Note for instance that the signal relay may be connected to an external supply which is still connected when the power supply is disconnected.

Warning

The surface of the terminal box may be above 158 °F (70 °C) when the pump is operating.

13.2.1 Preparation

Before connecting the E-pump to the power supply, take the issues illustrated in the figure below into consideration.

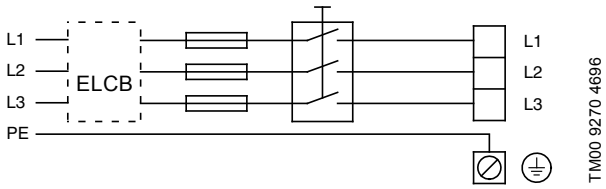

Fig. 12 Power supply-connected pump with power switch, backup fuses, additional protection and protective grounding

13.2.2 Protection against electric shock - indirect contact

Warning

The pump must be grounded in accordance with national regulations.

As the leakage current of 15-30 hp motors is > 10 mA, take extra precautions when grounding these motors.

EN 61800-5-1 specifies that the pump must be stationary and installed permanently when the leakage current is > 10 mA.

One of the following requirements must be fulfilled:

- A single protective ground lead (7 AWG minimum copper)

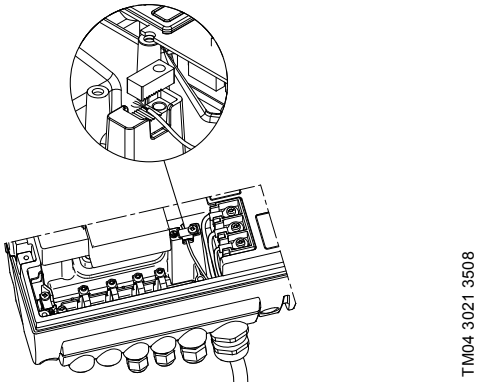

Fig. 13 Connection of a single protective ground lead using one of the leads of a 4-core power cable (7 AWG minimum)

- Two protective ground leads of the same cross-sectional area as the power supply leads, with one lead connected to an additional ground terminal in the terminal box.

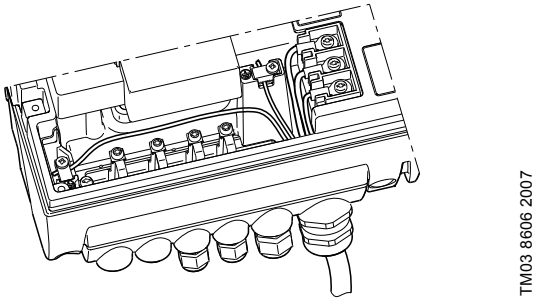

Fig. 14 Connection of two protective ground leads using two of the leads of a 5-core power supply cable

Protective ground leads must always have a yellow/green (PE) or yellow/green/blue (PEN) color marking.

13.2.3 Backup fuses

For recommended fuse sizes, see section *29.1 Supply voltage* on page 45.

13.2.4 Additional protection

If the pump is connected to an electric installation where an ground leakage circuit breaker (ELCB) is used as additional protection, the circuit breaker must be of a type marked with the following symbols:


ELCB

This circuit breaker is **type B.**

The total leakage current of all the electrical equipment in the installation must be taken into account.

The leakage current of the motor in normal operation can be seen in section *29.3 Leakage current*.

During start and at asymmetrical supply systems, the leakage current can be higher than normal and may cause the ELCB to trip.

13.2.5 Motor protection

The pump requires no external motor protection. The motor incorporates thermal protection against slow overloading and blocking (IEC 34-11, TP 211).

13.2.6 Protection against voltage transients

The pump is protected against voltage transients in accordance with EN 61800-3 and is capable of withstanding a VDE 0160 pulse.

The pump has a replaceable varistor which is part of the transient protection.

Over time this varistor will be worn and need to be replaced. When the time for replacement has come, Grundfos GO, R100 and PC Tool E-products will indicate this as a warning. See section *27. Maintenance and service* on page 44.

13.2.7 Supply voltage

3 x 440-480 V - 10 %/+ 10 %, 60 Hz, PE.

The supply voltage and frequency are marked on the pump nameplate. Make sure that the motor is suitable for the power supply of the installation site.

The wires in the terminal box must be as short as possible. Excepted from this is the protective ground lead which must be so long that it is the last one to be disconnected in case the cable is inadvertently pulled out of the cable entry.

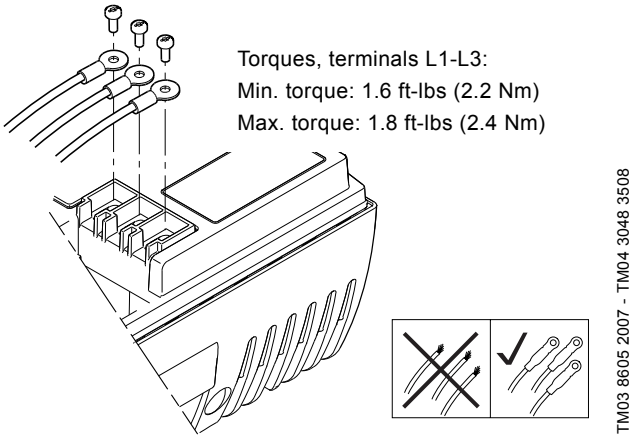

Fig. 15 Power connection

Cable glands

Cable glands comply with EN 50626.

- 1 x M40 cable gland
- 1 x M20 cable gland
- 2 x M16 cable gland
- 2 x M16 knock-out cable entries.

Warning

If the supply cable is damaged, it must be replaced by qualified personnel.

Grid types

Three-phase E-pumps can be connected to all grid types.

Warning

Do not connect three-phase E-pumps to a power supply with a voltage between phase and ground of more than 440 V.

13.2.8 Start/stop of pump

Caution ***The number of starts and stops via the power supply must not exceed 4 times per hour.***

When the pump is switched on via the power supply, it will start after approx. 5 seconds.

If a higher number of starts and stops is desired, use the input for external start/stop when starting/stopping the pump.

When the pump is switched on via an external on/off switch, it will start immediately.

13.2.9 Connections

Note ***If no external on/off switch is connected, connect terminals 2 and 3 using a short wire.***

As a precaution, the wires to be connected to the following connection groups must be separated from each other by reinforced insulation in their entire lengths:

Group 1: Inputs

- start/stop terminals 2 and 3
- digital input terminals 1 and 9
- setpoint input terminals 4, 5 and 6
- sensor input terminals 7 and 8
- GENIbus terminals B, Y and A

All inputs (group 1) are internally separated from the power-conducting parts by reinforced insulation and galvanically separated from other circuits.

All control terminals are supplied with protective extra-low voltage (PELV), thus ensuring protection against electric shock.

Group 2: Output (relay signal, terminals NC, C, NO)

The output (group 2) is galvanically separated from other circuits. Therefore, the supply voltage or protective extra-low voltage can be connected to the output as desired.

Group 3: Power supply (terminals L1, L2, L3)

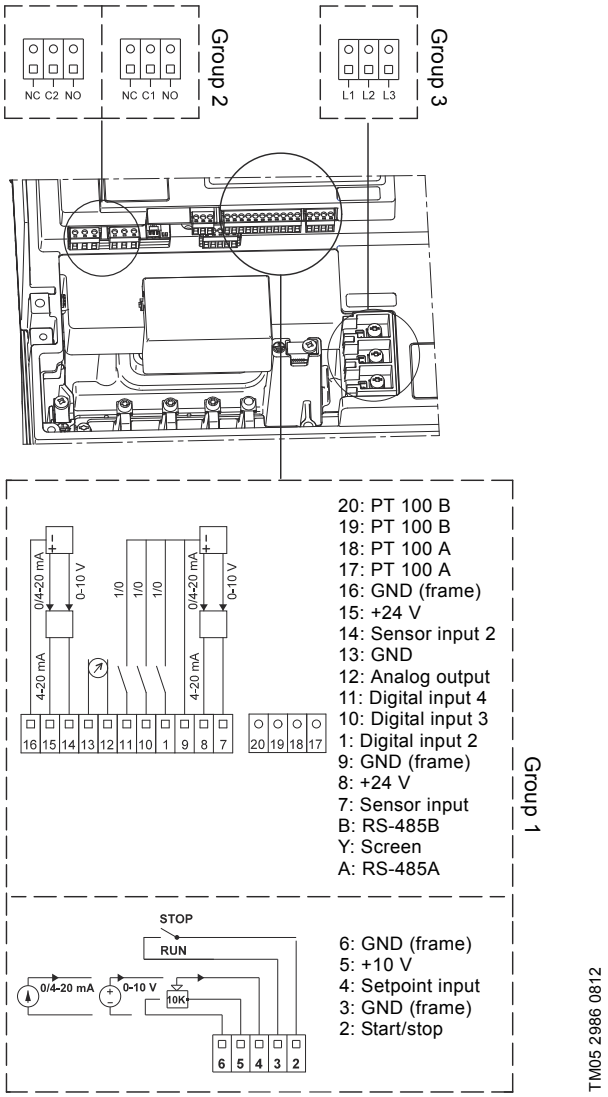

Fig. 16 Connection terminals

A galvanic separation must fulfill the requirements for reinforced insulation including creepage distances and clearances specified in EN 61800-5-1.

13.3 Signal cables

- Use screened cables with a conductor cross-section of min. 28 AWG and max. 16 AWG for external on/off switch, digital input, setpoint and sensor signals.
- Connect the screens of the cables to frame at both ends with good frame connection. The screens must be as close as possible to the terminals. See fig. 17.

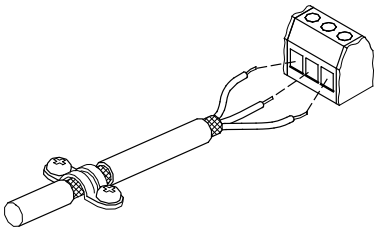

Fig. 17 Stripped cable with screen and wire connection

- Always tighten screws for frame connections whether a cable is fitted or not.
- Make the wires in the pump terminal box as short as possible.

13.4 E-pump electrical connections

13.4.1 Type key

DPI +T 0-6 G 1/2" 020 E, Set

- Type
- Temperature sensor:
  +T = with temperature Sensor
- Flow range [m^3/h]
- Thread size
- Output signal:
  020 = 4-20 mA
- O-ring material:
  E = EPDM
  F = FKM
- Set = Complete pressure transmitter

13.4.2 Electrical connections

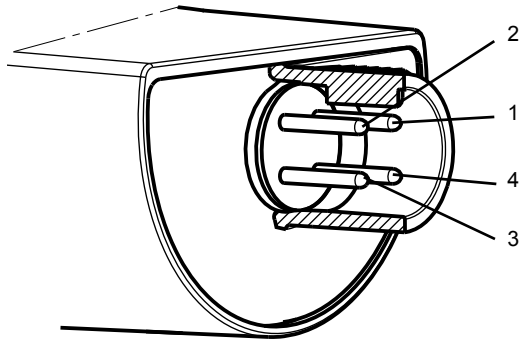

TM04 7156 1610

Fig. 18 Electrical connections

PIN	1	2	3	4
Wire color	Brown	Grey	Blue	Black
Output 4-20 mA	+	Not used	-	Not used
Output 2 x 0-10 V	+	Pressure signal	-*	Temperature signal

* Common ground for both pressure and temperature signal.

* Power supply (screened cable): SELV or PELV.

* Grundfos will not be liable for damage or wear to products caused by abnormal operating conditions, accident abuse, misuse unauthorized alteration or repair, or if the product was not installed in accordance with Grundfos' printed installation and operating instructions. Splicing of the supplied cable would void any warranty.

13.4.3 Connection of E-pump to LiqTec®

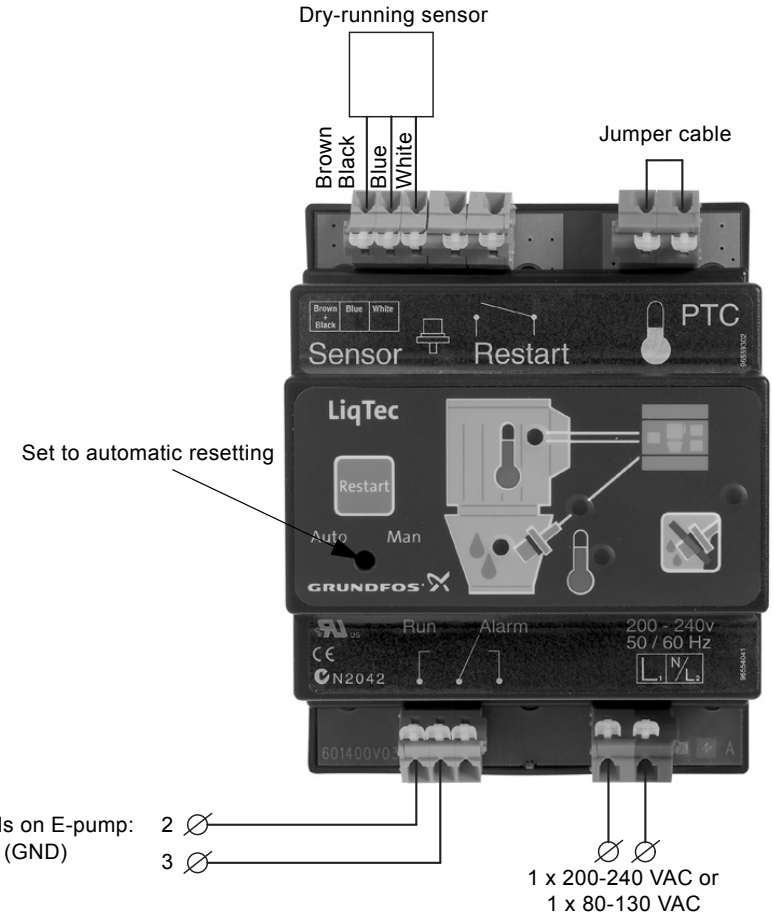

TM03 0437 5104

Fig. 19 Connection of E-pump to LiqTec

13.5 Bus connection cable

13.5.1 New installations

For the bus connection, use a screened 3-core cable with a conductor cross-section of 28-16 AWG.

- If the pump is connected to a unit with a cable clamp which is identical to the one on the pump, connect the screen to this cable clamp.
- If the unit has no cable clamp as shown in fig. 20, leave the screen unconnected at this end.

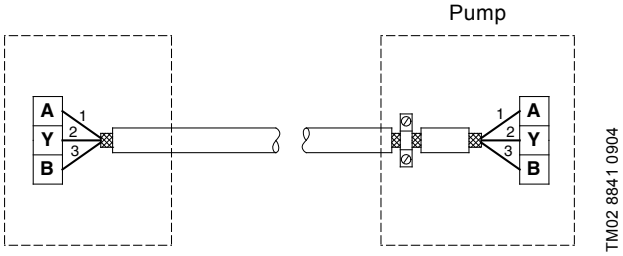

Fig. 20 Connection with screened 3-core cable

13.5.2 Replacing an existing pump

- If a screened 2-core cable is used in the existing installation, connect it as shown in fig. 21.

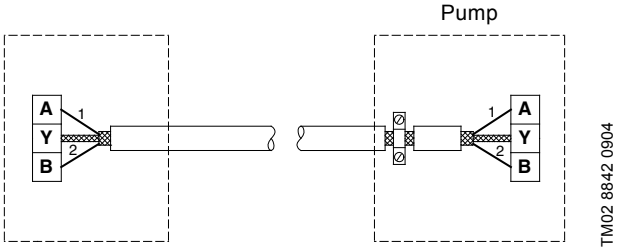

Fig. 21 Connection with screened 2-core cable

- If a screened 3-core cable is used in the existing installation, follow the instructions in section *13.5.1 New installations* on page 23.

14. Modes

Grundfos E-pumps are set and controlled according to operating and control modes.

14.1 Overview of modes

Operating modes	Normal	— Stop	— Min.	— Max.
Control modes	Uncontrolled	— Controlled		
	Constant curve	Constant pressure[1)]		

1) For this control mode the pump is equipped with a pressure sensor. The pump may also be equipped with a temperature sensor in which case the description would be constant temperature in control mode controlled.

14.2 Operating mode

When the operating mode is set to Normal, the control mode can be set to controlled or uncontrolled. See section *14.3 Control mode* on page 24.

The other operating modes that can be selected are Stop, Min. or Max.

- Stop: the pump has been stopped
- Min.: the pump is operating at its minimum speed
- Max.: the pump is operating at its maximum speed.

Figure 22 is a schematic illustration of min. and max. curves.

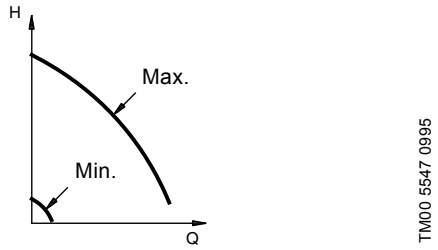

Fig. 22 Min. and max. curves

The max. curve can for instance be used in connection with the venting procedure during installation.

The min. curve can be used in periods in which a minimum flow is required.

If the power supply to the pump is disconnected, the mode setting will be stored.

The Grundfos GO and R100 offers additional possibilities of setting and status displays. See section *17. Setting by means of R100* on page 25 and 37.

14.3 Control mode

14.3.1 Pumps without factory-fitted sensor

The pumps are factory-set to control mode **uncontrolled**.

In control mode uncontrolled, the pump will operate according to the constant curve set, fig. 23.

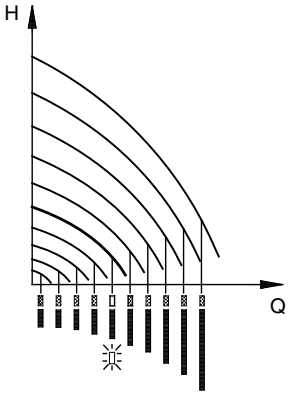

TM00 7746 1304

Fig. 23 Pump in control mode **uncontrolled** (constant curve)

14.3.2 Pumps with pressure sensor

The pump can be set to one of two control modes, i.e. controlled and uncontrolled, fig. 24.

In control mode **controlled**, the pump will adjust its performance, i.e. pump discharge pressure, to the desired setpoint for the control parameter.

In control mode **uncontrolled**, the pump will operate according to the constant curve set.

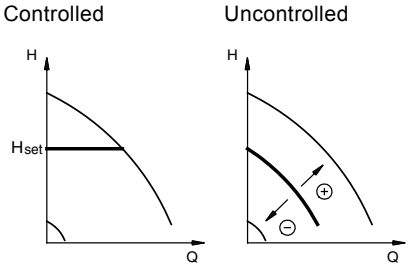

TM00 7668 0404

Fig. 24 Pump in control mode **controlled** (constant pressure) or **uncontrolled** (constant curve)

15. Setting up the pump

15.1 Factory setting

Pumps without factory-fitted sensor

The pumps have been factory-set to control mode **uncontrolled**. The setpoint value corresponds to 100 % of the maximum pump performance (see data sheet for the pump).

Pumps with pressure sensor

The pumps have been factory-set to control mode **controlled**. The setpoint value corresponds to 50 % of the sensor measuring range (see sensor nameplate).

16. Setting by means of control panel

Proportional pressure

The pump head is reduced at decreasing water demand and increased at rising water demand. See fig. 25.

This control mode is especially suitable in systems with relatively large pressure losses in the distribution pipes. The head of the pump will increase proportionally to the flow in the system to compensate for the large pressure losses in the distribution pipes.

The setpoint can be set with an accuracy of 0.33 ft (0.1 m). The head against a closed valve is half the setpoint, H_{set}.

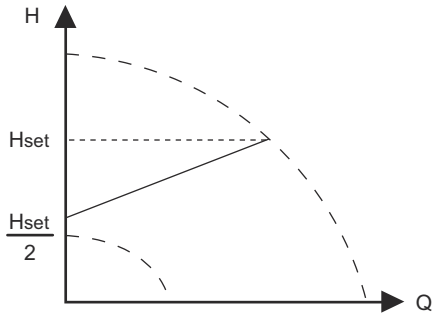

TM05 7909 1613

Fig. 25 Proportional pressure

This control mode requires a factory-fitted differential-pressure sensors as shown in the example below:

Example

- Factory-fitted differential-pressure sensor.

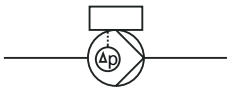

Fig. 26 Proportional pressure

16.1 Setting of operating mode

Settings available:

- Normal
- Stop
- Min.
- Max.

Start/stop of pump

Start the pump by continuously pressing ⊛ until the desired setpoint is indicated. This is operating mode Normal.

Stop the pump by continuously pressing ⊛ until none of the light fields are activated and the green indicator light flashes.

Setting to Min.

Press ⊗ continuously to change to the min. curve of the pump (bottom light field flashes). When the bottom light field is on, press ⊗ for 3 seconds until the light field starts flashing.

To return to uncontrolled or controlled operation, press ⊗ continuously until the desired setpoint is indicated.

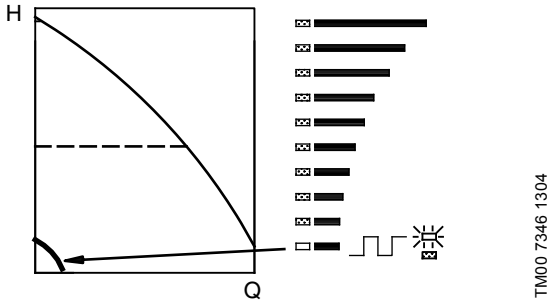

Fig. 27 Min. curve duty

Setting to Max.

Press ⊗ continuously to change to the max. curve of the pump (top light field flashes). When the top light field is on, press ⊗ for 3 seconds until the light field starts flashing.

To return to uncontrolled or controlled operation, press ⊗ continuously until the desired setpoint is indicated.

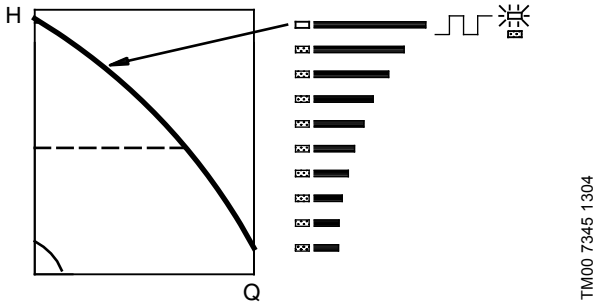

Fig. 28 Max. curve duty

16.2 Setpoint setting

Set the desired setpoint by pressing the button ⊗ or ⊗.

The light fields on the control panel will indicate the setpoint set. See examples in sections *16.2.1 Pump in control mode controlled (pressure control)* on page 25 and *16.2.2 Pump in control mode uncontrolled* on page 25.

16.2.1 Pump in control mode controlled (pressure control)

Example

Figure 29 shows that the light fields 5 and 6 are activated, indicating a desired setpoint of 43 psi (3 bar). The setting range is equal to the sensor measuring range (see sensor nameplate).

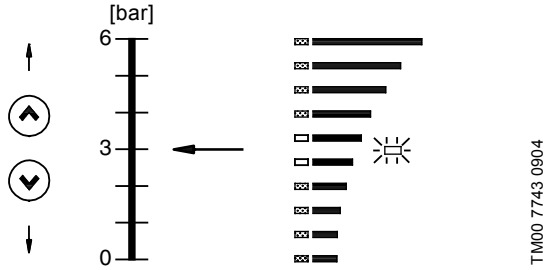

Fig. 29 Setpoint set to 3 bar, pressure control

16.2.2 Pump in control mode uncontrolled

Example

In control mode uncontrolled, the pump performance is set within the range from min. to max. curve. See fig. 30.

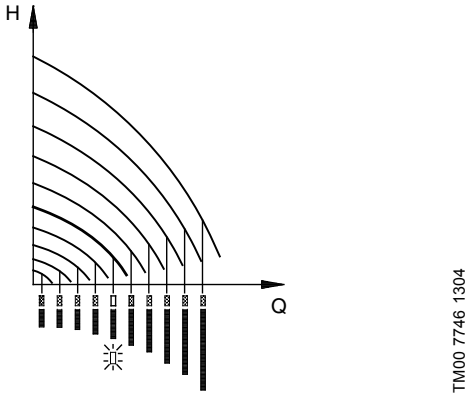

Fig. 30 Pump performance setting, control mode uncontrolled

17. Setting by means of R100

The pump is designed for wireless communication with Grundfos remote control R100.

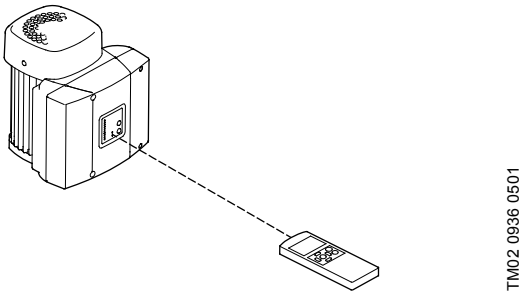

Fig. 31 R100 communicating with the pump via infra-red light

During communication, the R100 must be pointed at the control panel. When the R100 communicates with the pump, the red indicator light will flash rapidly. Keep pointing the R100 at the control panel until the red LED diode stops flashing.

The R100 offers setting and status displays for the pump.

The displays are divided into four parallel menus (see fig. 39):

0. GENERAL (see operating instructions for the R100)
1. OPERATION
2. STATUS
3. INSTALLATION

The figure above each individual display in fig. 39 refers to the section in which the display is described.

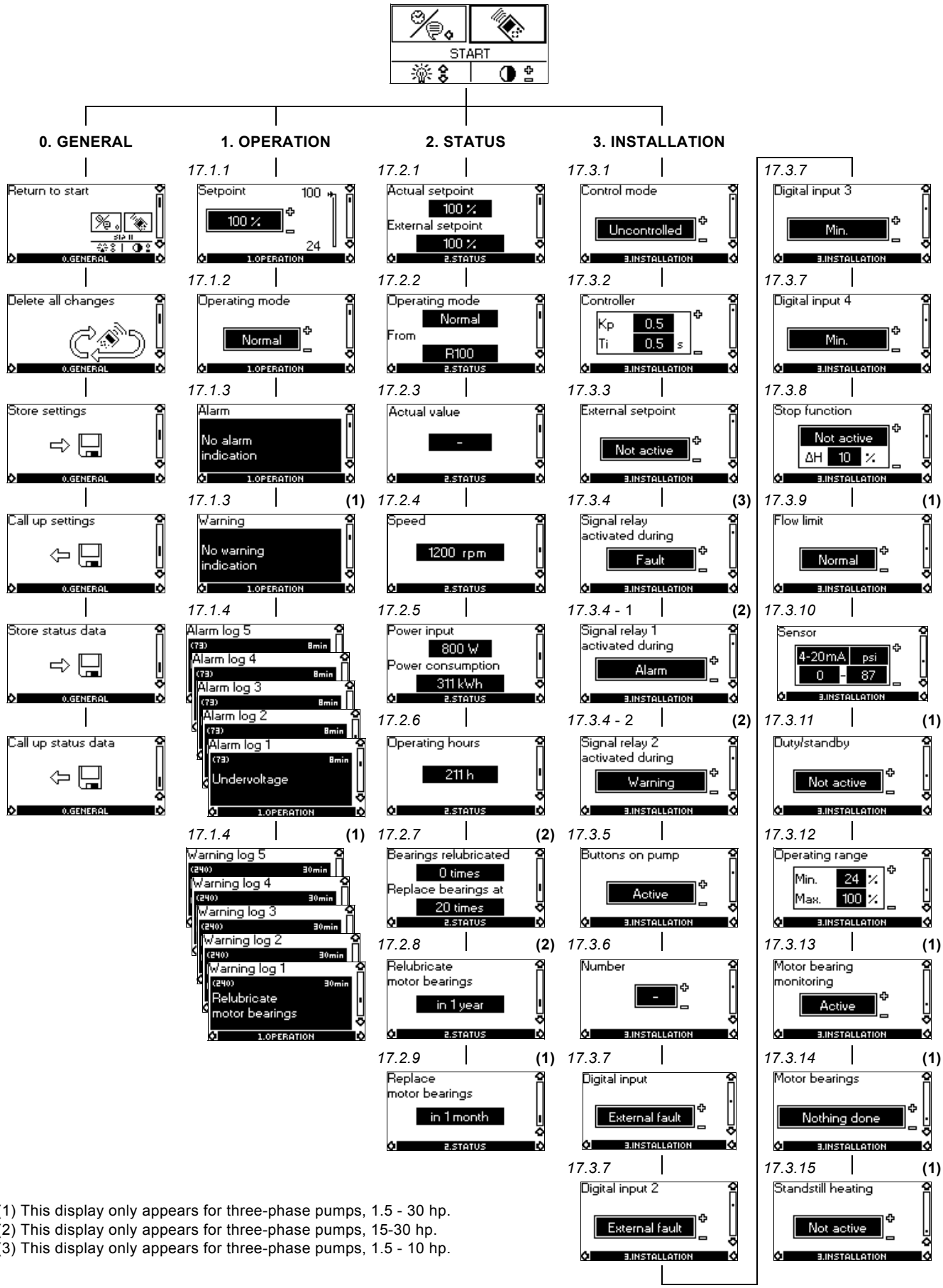

(1) This display only appears for three-phase pumps, 1.5 - 30 hp.
(2) This display only appears for three-phase pumps, 15-30 hp.
(3) This display only appears for three-phase pumps, 1.5 - 10 hp.

Displays in general

In the following explanation of the functions, one or two displays are shown.

One display

Pumps without or with factory-fitted sensor have the same function.

Two displays

Pumps without or with factory-fitted pressure sensor have different functions and factory settings.

17.1 Menu OPERATION

The first display in this menu is this:

17.1.1 Setpoint

Without sensor (uncontrolled)

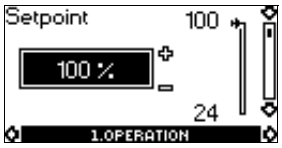

- Setpoint set
- Actual setpoint
- Actual value

Set the setpoint in %.

With pressure sensor (controlled)

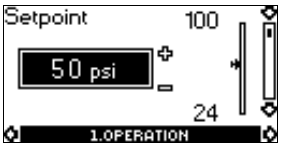

- Setpoint set
- Actual setpoint
- Actual value

Set the desired pressure in bar.

In control mode **uncontrolled**, the setpoint is set in % of the maximum performance. The setting range will lie between the min. and max. curves.

In control mode **controlled**, the setting range is equal to the sensor measuring range.

If the pump is connected to an external setpoint signal, the value in this display will be the maximum value of the external setpoint signal. See section *21. External setpoint signal* on page 40.

Setpoint and external signal

The setpoint cannot be set if the pump is controlled via external signals (Stop, Min. curve or Max. curve). R100 will give this warning: External control!

Check if the pump is stopped via terminals 2-3 (open circuit) or set to min. or max. via terminals 1-3 (closed circuit).

See fig. 40 on page 37.

Setpoint and bus communication

The setpoint cannot be set either if the pump is controlled from an external control system via bus communication. R100 will give this warning: Bus control!

To override bus communication, disconnect the bus connection.

See fig. 40 on page 37.

17.1.2 Operating mode

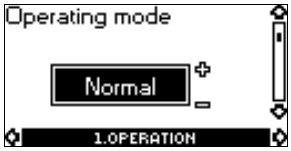

Set one of the following operating modes:

- Normal (duty)
- Stop
- Min.
- Max.

The operating modes can be set without changing the setpoint setting.

17.1.3 Fault indications

In E-pumps, faults may result in two types of indication: alarm or warning.

An "alarm" fault will activate an alarm indication in R100 and cause the pump to change operating mode, typically to stop. However, for some faults resulting in alarm, the pump is set to continue operating even if there is an alarm.

A "warning" fault will activate a warning indication in R100, but the pump will not change operating or control mode.

Note ***The indication, Warning, only applies to three-phase pumps.***

Alarm

In case of alarm, the cause will appear in this display.

Possible causes:

- No alarm indication
- Too high motor temperature
- Undervoltage
- Mains voltage asymmetry (15-30 hp)
- Overvoltage
- Too many restarts (after faults)
- Overload
- Underload
- Sensor signal outside signal range
- Setpoint signal outside signal range
- External fault
- Duty/standby, Communication fault
- Dry running
- Other fault.

If the pump has been set up to manual restart, an alarm indication can be reset in this display if the cause of the fault has disappeared.

Warning (only three-phase pumps)

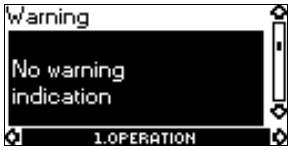

In case of warning, the cause will appear in this display.

Possible causes:

- No warning indication.
- Sensor signal outside signal range.
- Relubricate motor bearings, see section *27.2 Relubrication of motor bearings* on page 44.
- Replace motor bearings, see section *27.3 Replacement of motor bearings* on page 44.
- Replace varistor, see section *27.4 Replacement of varistor (only 15-30 hp)* on page 44.

A warning indication will disappear automatically once the fault has been remedied.

17.1.4 Fault log

For both fault types, alarm and warning, the R100 has a log function.

Alarm log

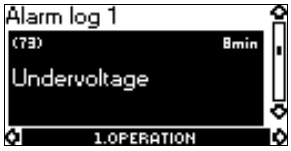

In case of "alarm" faults, the last five alarm indications will appear in the alarm log. "Alarm log 1" shows the latest fault, "Alarm log 2" shows the latest fault but one, etc.

The example above gives this information:

- the alarm indication Undervoltage
- the fault code (73)
- the number of minutes the pump has been connected to the power supply after the fault occurred, 8 min.

Warning log

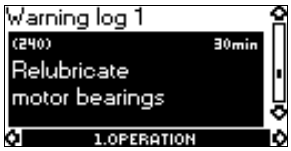

In case of "warning" faults, the last five warning indications will appear in the warning log. "Warning log 1" shows the latest fault, "Warning log 2" shows the latest fault but one, etc.

The example above gives this information:

- the warning indication Relubricate motor bearings
- the fault code (240)
- the number of minutes the pump has been connected to the power supply since the fault occurred, 30 min.

17.2 Menu STATUS

The displays appearing in this menu are status displays only. It is not possible to change or set values.

The displayed values are the values that applied when the last communication between the pump and the R100 took place. If a status value is to be updated, point the R100 at the control panel and press "OK". If a parameter, e.g. speed, should be called up continuously, press "OK" constantly during the period in which the parameter in question should be monitored.

The tolerance of the displayed value is stated under each display. The tolerances are stated as a guide in % of the maximum values of the parameters.

17.2.1 Actual setpoint

Without sensor (uncontrolled)

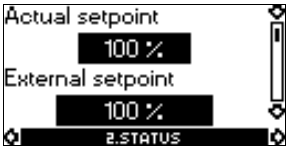

Tolerance: ± 2 %.

With pressure sensor (controlled)

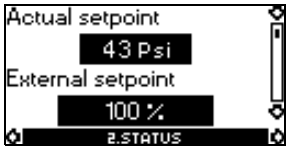

Tolerance: ± 2 %.

This display shows the actual setpoint and the external setpoint in % of the range from minimum value to the setpoint set. See section *21. External setpoint signal* on page 40.

17.2.2 Operating mode

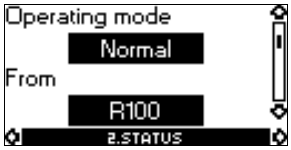

This display shows the actual operating mode (Normal (duty), Stop, Min., or Max.). Furthermore, it shows where this operating mode was selected (R100, Pump, Bus, External or Stop func.). For further details about the stop function (Stop func.), see section *17.3.8 Stop function* on page 32.

17.2.3 Actual value

Without sensor (uncontrolled)

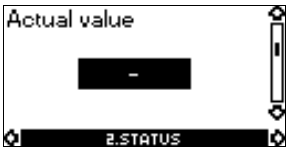

With pressure sensor (controlled)

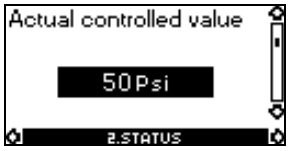

This display shows the value actually measured by a connected sensor.

If no sensor is connected to the pump, "-" will appear in the display.

17.2.4 Speed

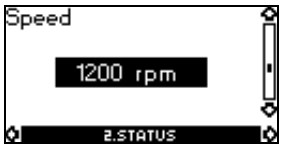

Tolerance: ± 5 %

The actual pump speed will appear in this display.

17.2.5 Power input and power consumption

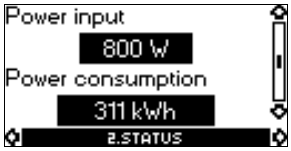

Tolerance: ± 10 %

This display shows the actual pump input power from the power supply. The power is displayed in W or kW.

The pump power consumption can also be read from this display. The value of power consumption is an accumulated value calculated from the pump's birth and it cannot be reset.

17.2.6 Operating hours

Tolerance: ± 2 %

The value of operating hours is an accumulated value and cannot be reset.

17.2.7 Lubrication status of motor bearings (only 15-30 hp)

This display shows how many times the motor bearings have been relubricated and when to replace the motor bearings.

When the motor bearings have been relubricated, confirm this action in the INSTALLATION menu.

See section *17.3.14 Confirming relubrication/replacement of motor bearings (only three-phase pumps)* on page 35. When relubrication is confirmed, the figure in the above display will be increased by one.

17.2.8 Time till relubrication of motor bearings

This display shows when to relubricate the motor bearings. The controller monitors the operating pattern of the pump and calculates the period between bearing relubrications. If the operating pattern changes, the calculated time till relubrication may change as well.

The displayable values are these:

- in 2 years
- in 1 year
- in 6 months
- in 3 months
- in 1 month
- in 1 week
- Now!

17.2.9 Time till replacement of motor bearings

When the motor bearings have been relubricated a prescribed number of times stored in the controller, the display in section *17.2.8 Time till relubrication of motor bearings* on page 29 will be replaced by the display below.

This display shows when to replace the motor bearings. The controller monitors the operating pattern of the pump and calculates the period between bearing replacements.

The displayable values are these:

- in 2 years
- in 1 year
- in 6 months
- in 3 months
- in 1 month
- in 1 week
- Now!

17.3 Menu INSTALLATION

17.3.1 Control mode

Without sensor (uncontrolled)

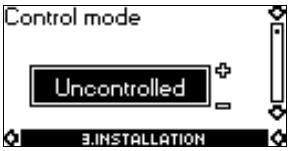

Select one of the following control modes (see fig. 24):

- Controlled
- Uncontrolled.

With pressure sensor (controlled)

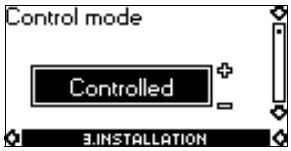

Select one of the following control modes (see fig. 24):

- Controlled
- Uncontrolled.

Note

If the pump is connected to a bus, the control mode cannot be selected via the R100. See section 22. Bus signal.

17.3.2 Controller

E-pumps have a factory default setting of gain (K_p) and integral time (T_i). However, if the factory setting is not the optimum setting, the gain and the integral time can be changed in the display below.

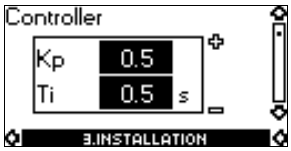

- The gain (K_p) can be set within the range from 0.1 to 20.
- The integral time (T_i) can be set within the range from 0.1 to 3600 s. If 3600 s is selected, the controller will function as a P controller.
- Furthermore, it is possible to set the controller to inverse control, meaning that if the setpoint is increased, the speed will be reduced. In the case of inverse control, the gain (K_p) must be set within the range from -0.1 to -20.

The table below shows the suggested controller settings:

System/application	K_p Heating systems★	K_p Cooling systems★★	T_i
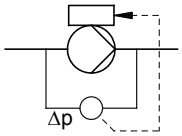	0.5		0.5
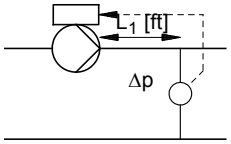	0.5		L_1 < 16.4 ft: 0.5 L_1 > 16.4 ft: 3 L_1 > 32.8 ft: 5
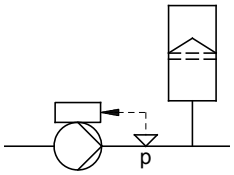	0.5		0.5
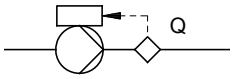	0.5		0.5
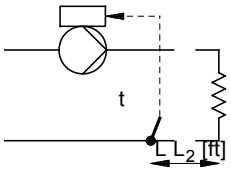	0.5	-0.5	10 + 1.5L_2
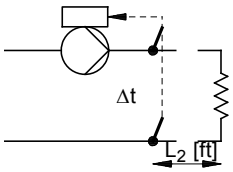	0.5		10 + 1.5L_2
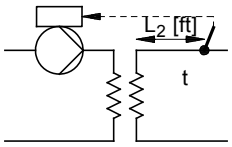	0.5	-0.5	30 + 1.5L_2
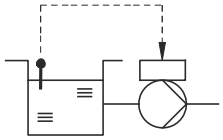	+2.5		100

★ Heating systems are systems in which an increase in pump performance will result in a **rise** in temperature at the sensor.

★★ Cooling systems are systems in which an increase in pump performance will result in a **drop** in temperature at the sensor.

L_1 = Distance in [ft] between pump and sensor

L_2 = Distance in [ft] between heat exchanger and sensor

How to set the PI controller

For most applications, the factory setting of the controller constants K_p and T_i will ensure optimum pump operation. However, in some applications an adjustment of the controller may be needed.

Proceed as follows:

1. Increase the gain (K_p) until the motor becomes unstable. Instability can be seen by observing if the measured value starts to fluctuate. Furthermore, instability is audible as the motor starts hunting up and down.
   Some systems, such as temperature controls, are slow-reacting, meaning that it may be several minutes before the motor becomes unstable.
2. Set the gain (K_p) to half of the value which made the motor unstable. This is the correct setting of the gain.
3. Reduce the integral time (T_i) until the motor becomes unstable.
4. Set the integral time (T_i) to twice the value which made the motor unstable. This is the correct setting of the integral time.

General rules of thumb:

- If the controller is too slow-reacting, increase K_p.
- If the controller is hunting or unstable, dampen the system by reducing K_p or increasing T_i.

17.3.3 External setpoint

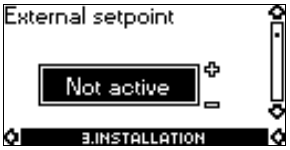

The input for external setpoint signal can be set to different signal types.

Select one of the following types:

- 0-10 V
- 0-20 mA
- 4-20 mA
- Not active.

If Not active is selected, the setpoint set by means of the R100 or on the control panel will apply.

If one of the signal types is selected, the actual setpoint is influenced by the signal connected to the external setpoint input. See section *21. External setpoint signal* on page 40.

17.3.4 Signal relay

Pumps of 3-10 hp have one signal relay. The factory setting of the relay will be Fault.

Pumps of 15-30 hp have two signal relays. Signal relay 1 is factory set to Alarm and signal relay 2 to Warning.

In one of the displays below, select in which one of three or six operating situations the signal relay should be activated.

3-10 hp

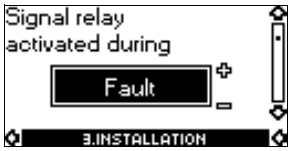

- Ready
- Fault
- Operation
- Pump running (only three-phase pumps, 3-10 hp)
- Warning (only three-phase pumps, 3-10 hp).

15-30 hp

- Ready
- Alarm
- Operation
- Pump running
- Warning
- Relubricate.

15-30 hp

- Ready
- Alarm
- Operation
- Pump running
- Warning
- Relubricate.

Note

Fault and Alarm cover faults resulting in Alarm. Warning covers faults resulting in Warning. Relubricate covers only that one individual event. For distinction between alarm and warning, see section 17.1.3 Fault indications on page 27.

For further information, see section *24. Indicator lights and signal relay* on page 41.

17.3.5 Buttons on pump

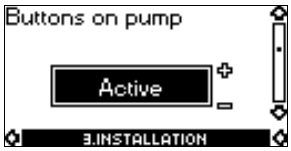

The operating buttons ⊛ and ⊛ on the control panel can be set to these values:

- Active
- Not active.

When set to Not active (locked), the buttons do not function. Set the buttons to Not active if the pump should be controlled via an external control system.

17.3.6 Pump number

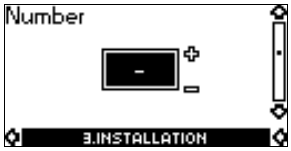

A number between 1 and 64 can be allocated to the pump. In the case of bus communication, a number must be allocated to each pump.

17.3.7 Digital inputs

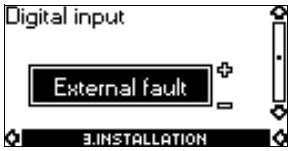

The digital inputs of the pump can be set to different functions.

Select one of the following functions:

- Min. (min. curve)
- Max. (max. curve)
- External fault
- Flow switch
- Dry running (from external sensor) (only three-phase pumps).

The selected function is activated by closing the contact between terminals 1 and 9, 1 and 10 or 1 and 11.

See also section *20.2 Digital input* on page 40.

***Min.*:**

When the input is activated, the pump will operate according to the min. curve.

***Max.*:**

When the input is activated, the pump will operate according to the max. curve.

***External fault*:**

When the input is activated, a timer will be started. If the input is activated for more than 5 seconds, the pump will be stopped and a fault will be indicated. If the input is deactivated for more than 5 seconds, the fault condition will cease and the pump can only be restarted manually by resetting the fault indication.

***Flow switch*:**

When this function is selected, the pump will be stopped when a connected flow switch detects low flow.

It is only possible to use this function if the pump is connected to a pressure sensor.

If the input is activated for more than 5 seconds, the stop function incorporated in the pump will take over. See section *17.3.8 Stop function* on page 32.

Dry running:

When this function is selected, lack of inlet pressure or water shortage can be detected. This requires the use of an accessory, such as these:

- a Grundfos Liqtec® dry-running sensor
- a pressure switch installed on the suction side of a pump
- a float switch installed on the suction side of a pump.

When lack of inlet pressure or water shortage (Dry running) is detected, the pump will be stopped. The pump cannot restart as long as the input is activated.

17.3.8 Stop function

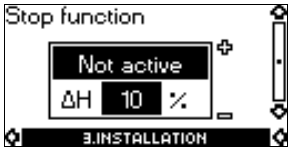

The stop function can be set to these values:

- Active
- Not active.

When the stop function is active, the pump will be stopped at very low flows. The controller will stop the pump to protect the pump as follows:

- avoid unnecessary heating of the pumped liquid
- reduce wear of the shaft seals
- reduce noise from operation.

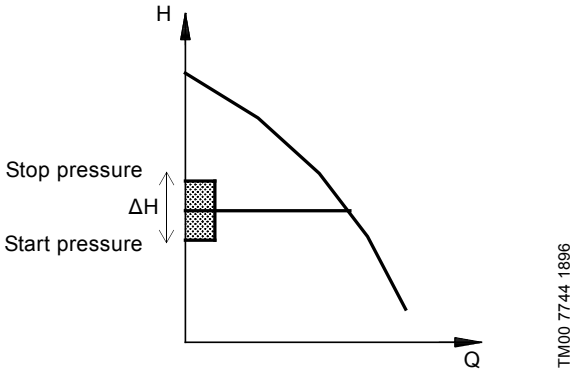

Fig. 32 Difference between start and stop pressures (ΔH)

ΔH is factory-set to **10 % of actual setpoint**.

ΔH can be set within the range from 5 % to 30 % of actual setpoint.

Low flow can be detected in two different ways:

1. A built-in "low-flow detection function" which functions if the digital input is not set up for flow switch.
2. A flow switch connected to the digital input.

1. Low-flow detection function

The pump will check the flow regularly by reducing the speed for a short time. If there is no or only a small change in pressure, this means that there is low flow. The speed will be increased until the stop pressure (actual setpoint + 0.5 x ΔH) is reached and the pump will stop. When the pressure has fallen to the start pressure (actual setpoint - 0.5 x ΔH), the pump will restart.

When restarting, the pumps will react differently according to pump type:

Three-phase pumps

1. If the flow is higher than the low-flow limit, the pump will return to continuous operation at constant pressure.
2. If the flow is still lower than the low-flow limit, the pump will continue in start/stop operation. It will continue in start/stop operation until the flow is higher than the low-flow limit; when the flow is higher than the low-flow limit, the pump will return to continuous operation.

2. Flow switch

When the digital input is activated for more than 5 seconds because there is low flow, the speed will be increased until the stop pressure (actual setpoint + 0.5 x ΔH) is reached, and the pump will stop. When the pressure has fallen to start pressure, the pump will start again. If there is still no flow, the pump will quickly reach stop pressure and stop. If there is flow, the pump will continue operating according to the setpoint.

Operating conditions for the stop function

It is only possible to use the stop function if the system incorporates a pressure sensor, a non-return valve and a diaphragm tank.

Caution ***The non-return valve must always be installed before the pressure sensor. See fig. 33 and fig. 34.***

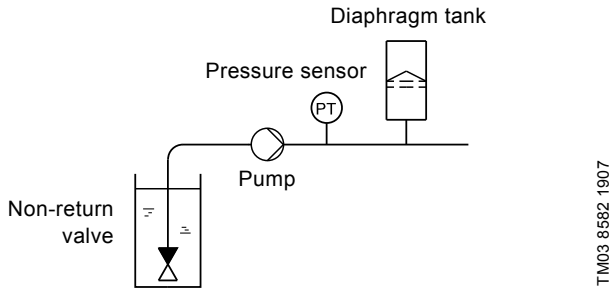

Fig. 33 Position of the non-return valve and pressure sensor in system with suction lift operation

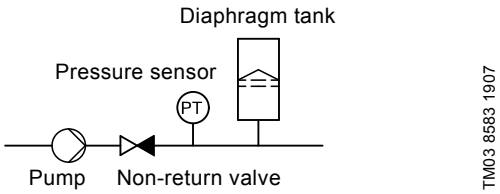

Fig. 34 Position of the non-return valve and pressure sensor in system with positive inlet pressure

Diaphragm tank

The stop function requires a diaphragm tank of a certain minimum size. The tank must be installed immediately after the pump and the precharge pressure must be 0.7 x actual setpoint.

Recommended diaphragm tank size:

Rated flow of pump [gpm (m^3/h)]	CRE pump	Typical diaphragm tank size [gal (litre)]
0-26 (0 - 5.9)	1s, 1, 3	2 (7.6)
27-105 (6.1 - 23.8)	5, 10, 15	4.4 (16.7)
106-176 (24.2 - 40)	20, 32	14 (53.0)
177-308 (40.2 - 70.0)	45	34 (128.7)
309-440 (70.2 - 99.9)	64, 90	62 (234.7)
441-750 (100-170)	120, 150	86 (325.5)

If a diaphragm tank of the above size is installed in the system, the factory setting of ΔH is the correct setting.

If the tank installed is too small, the pump will start and stop too often. This can be remedied by increasing ΔH.

17.3.9 Flow limit for the stop function

Note ***Flow limit for the stop function only works if the system is not set up for flow switch.***

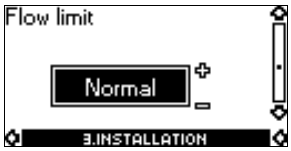

In order to set at which flow rate the system is to go from continuous operation at constant pressure to start/stop operation, select among these four values of which three are preconfigured flow limits:

- Low
- Normal
- High
- Custom.

The default setting of the pump is Normal, representing approx. 10 % of the rated flow rate of the pump.

If a lower flow limit than normal is desired or the tank size is smaller than recommended, select Low.

If a higher flow than normal is wanted or a large tank is used, set the limit to High.

The value Custom can be seen in R100 but it can only be set by means of the PC Tool E-products. Custom is for customized set-up and optimizing to the process.

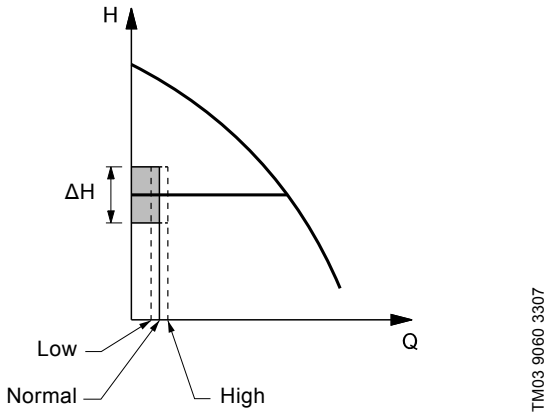

Fig. 35 Three preconfigured flow limits, Low, Normal and High

17.3.10 Sensor

Without sensor (uncontrolled)

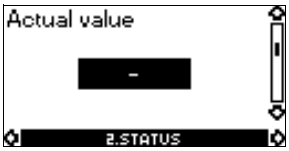

With pressure sensor (controlled)

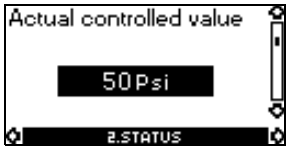

The setting of the sensor is only relevant in the case of controlled operation.

Select among the following values:

- Sensor output signal
  0-10 V
  0-20 mA
  4-20 mA,
- Unit of measurement of sensor:
  bar, mbar, m, kPa, psi, ft, m^3/h, m^3/s, l/s, gpm, °C, °F, %,
- Sensor measuring range.

17.3.11 Duty/standby

The duty/standby function applies to two pumps connected in parallel and controlled via GENIbus.

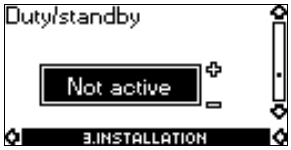

The duty/standby function can be set to these values:

- Active
- Not active.

When the function is set to Active, the following applies:

- Only one pump is running at a time.
- The stopped pump (standby) will automatically be cut in if the running pump (duty) has a fault. A fault will be indicated.
- Changeover between the duty pump and the standby pump will take place every 24 hours.

Activate the duty/standby function as follows:

1. Install and prime the two pumps according to the installation and operating instructions supplied with the pumps.
2. Check that the power supply is connected to the first pump according to the installation and operating instructions.
3. Use Grundfos R100 to set the duty/standby to Not active in the installation menu.
4. Use Grundfos R100 to set the Operating mode to Stop in the operation menu.
5. Use Grundfos R100 to set the other displays as required for the pump application (such as setpoint).
6. Disconnect the power supply to both pumps.
7. Installation of the AYB cable (91125604):
   a. Remove the plug from each MLE terminal box with a flat head screw driver. See fig. 36.
   b. Screw a new cable gland into each MLE terminal box with a crescent wrench. See fig. 36.
   c. Loosen the new cable gland caps and push the cable ends through the cable glands and into MLE motors.
   d. Remove the AYB connector plug from the first MLE motor. See fig. 37.
   e. Connect the black wire to the A terminal of the AYB connector plug.
   f. Connect the orange wire to the Y terminal of the AYB connector plug.
   g. Connect the red wire to the B terminal of the AYB connector plug.
   h. Reconnect the AYB connector plug to the first MLE motor.
   i. Tighten the cable gland cap to secure the cable. See fig. 36.
   j. Repeat steps d to i for the second MLE motor.
8. Connect the power supply to the two pumps according to the installation and operation instructions.
9. Use Grundfos R100 to check that the Operating mode is set to Normal in the operation menu of the second pump.
10. Use Grundfos R100 to set the other displays as required for the pump application (such as Setpoint).
11. Use Grundfos R100 to set the duty/standby to Active in the installation menu of the second pump. Please note the second pump will search for the first pump and automatically set the duty/standby to Active in the installation menu.
12. The second pump will operate for the first 24 hours. The two pumps will then alternate operation every 24 hours.

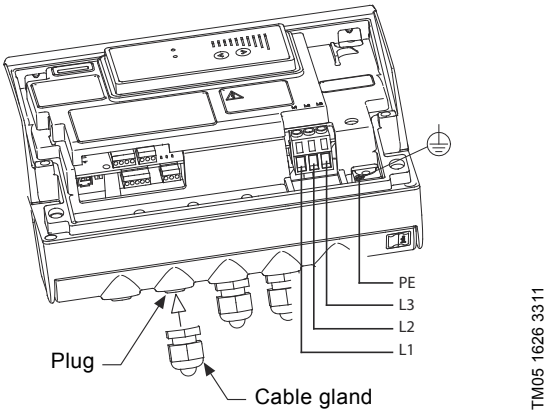

Fig. 36 Removing the plug and connecting cable gland to the terminal box

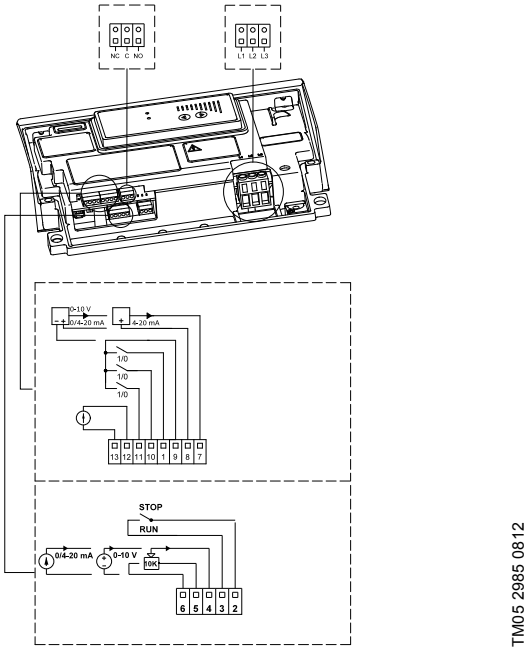

Fig. 37 AYB connector plug

17.3.12 Operating range

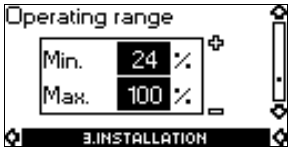

How to set the operating range:

- Set the min. curve within the range from max. curve to 12 % of maximum performance. The pump is factory-set to 24 % of maximum performance.
- Set the max. curve within the range from maximum performance (100 %) to min. curve.

The area between the min. and max. curves is the operating range.

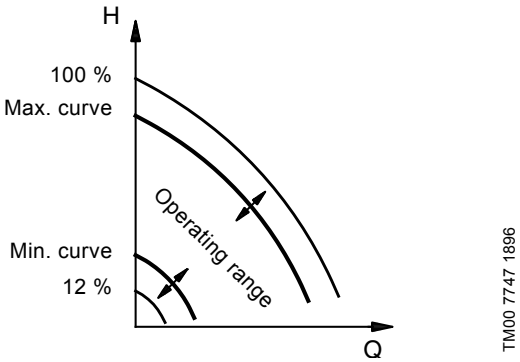

Fig. 38 Setting of the min. and max. curves in % of maximum performance

17.3.13 Motor bearing monitoring (only three-phase pumps)

The motor bearing monitoring function can be set to these values:

- Active
- Not active.

When the function is set to Active, a counter in the controller will start counting the mileage of the bearings. See section *17.2.7 Lubrication status of motor bearings (only 15-30 hp)* on page 29.

Note

The counter will continue counting even if the function is switched to Not active, but a warning will not be given when it is time for relubrication.

When the function is switched to Active again, the accumulated mileage will again be used to calculate the relubrication time.

17.3.14 Confirming relubrication/replacement of motor bearings (only three-phase pumps)

This function can be set to these values:

- Relubricated (only 15-30 hp)
- Replaced
- Nothing done.

When the bearing monitoring function is Active, the controller will give a warning indication when the motor bearings are due to be relubricated or replaced. See section *17.1.3 Fault indications* on page 27.

When the motor bearings have been relubricated or replaced, confirm this action in the above display by pressing OK.

Note

Relubricated cannot be selected for a period of time after confirming relubrication.

17.3.15 Standstill heating (only three-phase pumps)

The standstill heating function can be set to these values:

- Active
- Not active.

When the function is set to Active, an AC voltage will be applied to the motor windings. The applied voltage will ensure that sufficient heat is generated to avoid condensation in the motor.

17.4 Typical display settings for constant-pressure E-pumps

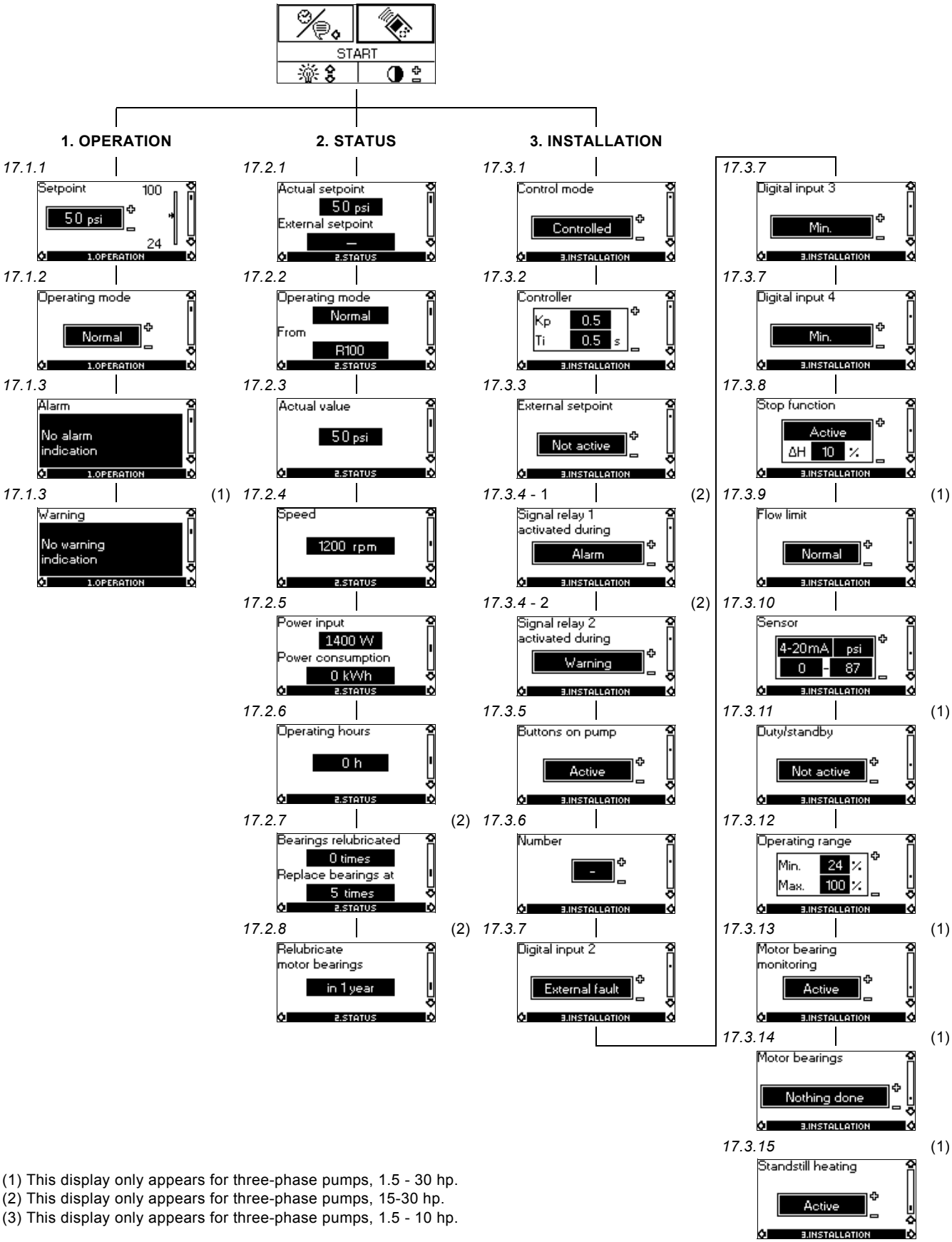

(1) This display only appears for three-phase pumps, 1.5 - 30 hp.
(2) This display only appears for three-phase pumps, 15-30 hp.
(3) This display only appears for three-phase pumps, 1.5 - 10 hp.

Fig. 39 Menu overview

17.5 Typical display settings for analog-input E-pumps

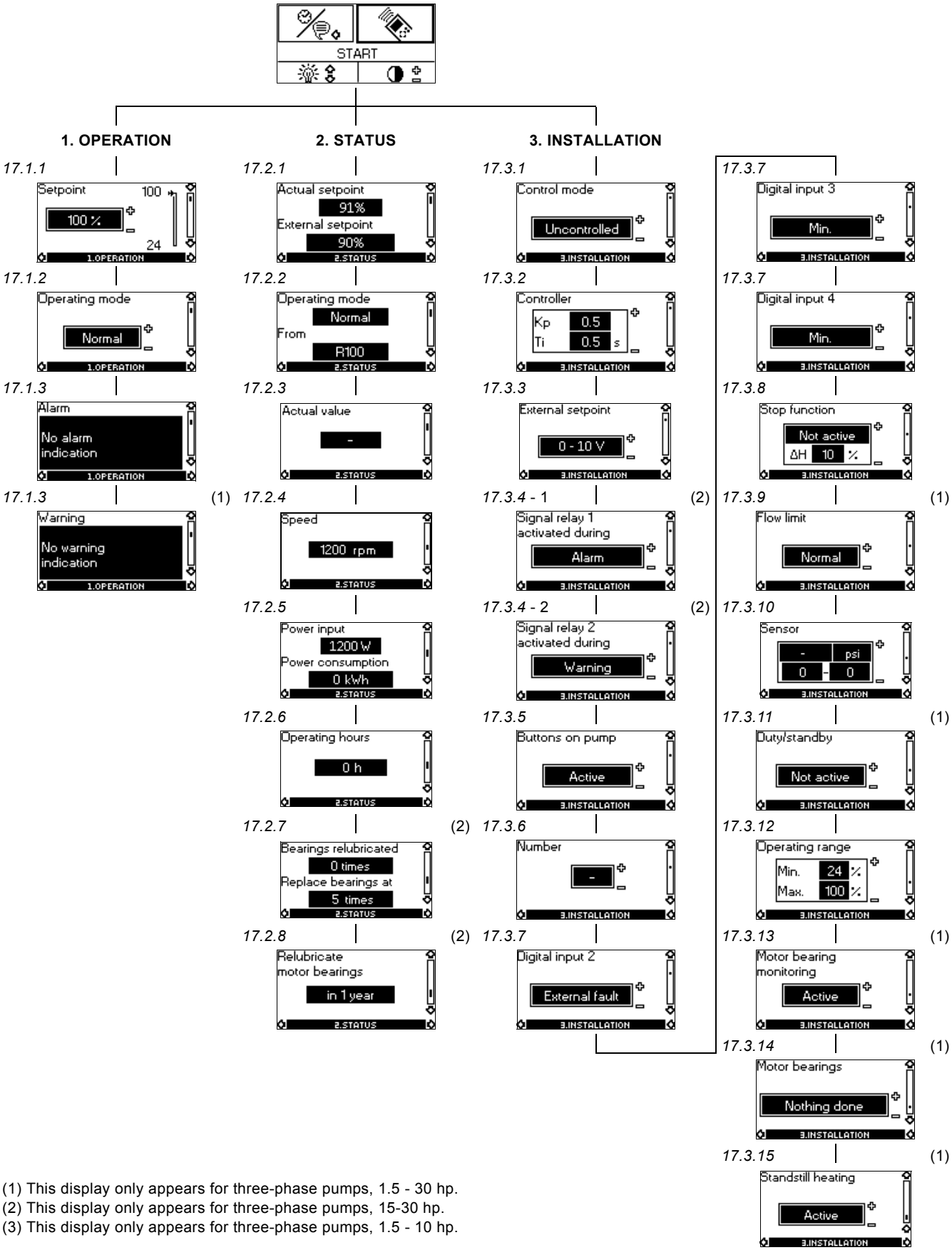

(1) This display only appears for three-phase pumps, 1.5 - 30 hp.
(2) This display only appears for three-phase pumps, 15-30 hp.
(3) This display only appears for three-phase pumps, 1.5 - 10 hp.

Fig. 40 Menu overview

17.6 Grundfos GO Remote

The motor is designed for wireless radio or infrared communication with Grundfos GO Remote.

Grundfos GO Remote enables setting of functions and gives access to status overviews, technical product information and actual operating parameters.

Grundfos GO Remote offers three different mobile interfaces (MI). See fig. 41.

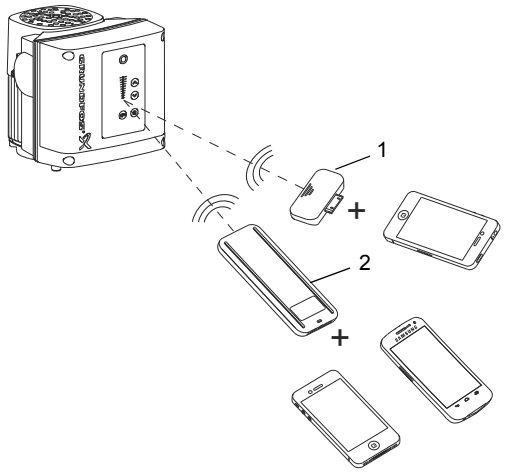

Fig. 41 Grundfos GO Remote communicating with the motor via radio or infrared light

Pos.	Description
1	Grundfos MI 202: Add-on module which can be used in conjunction with Apple iPod touch 4, iPhone 4G or later.
	Grundfos MI 204: Add-on module which can be used in conjunction with Apple iPod touch 5G or iPhone 5.
2	Grundfos MI 301: Separate module enabling radio or infrared communication. The module can be used in conjunction with an Android or iOS-based Smartphone with Bluetooth connection.

17.6.1 Communication

When Grundfos GO Remote communicates with the pump, the indicator light in the middle of the Grundfos Eye will flash green.

Communication must be established using one of these communication types:

- radio communication
- infrared communication.

Radio communication

Radio communication can take place at distances up to 30 meters. It is necessary to enable communication by pressing or OK on the pump control panel.

Infrared communication

When communicating via infrared light, Grundfos GO Remote must be pointed at the pump control panel.

17.6.2 Navigation

Navigation can be done from the dashboard. See fig. 42.

Dashboard

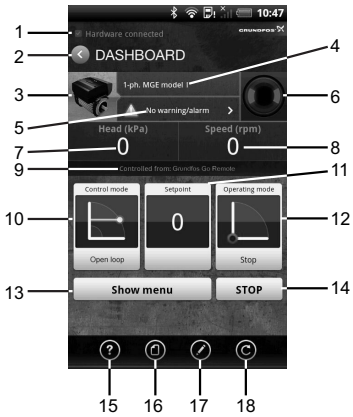

Fig. 42 Example of dashboard

Pos.	Description	Action
1	Connection indicator	This text appears when Grundfos GO Remote app has connected to an MI 204, MI 202 or MI 301. If the hardware is not connected, it will not be possible to communicate with a Grundfos product.
2	Back button	Returns to the previous display.
3	Product information	Provides technical information about the product.
4	Product name	Name of the product communicating with Grundfos GO Remote.
5	Alarms and warnings	Shows alarms and warnings.
6	Grundfos Eye	Shows the operating condition of the product.
7	Primary status value	Shows the primary status value.
8	Secondary status value	Shows the secondary status value.
9	Control source	Shows by which interface the product is controlled.
10	Control mode	Shows the control mode of the product.
11	Actual setpoint value	Shows the actual setpoint value.
12	Operating mode	Shows the operating mode.
13	Show menu	Gives access to other menus.
14	Stop	Stops the product.
Tool bar		
15	Help	The help function describes the menus making it easy for the user to change settings, etc.
16	Documentation	Gives access to installation and operating instructions and quick guides.
17	Report	Enables the creation of user-defined reports.
18	Update	Enables update of Grundfos GO Remote app.

18. Setting by means of PC Tool E-products

Special setup requirements differing from the settings available via the R100 require the use of Grundfos PC Tool E-products. This again requires the assistance of a Grundfos service technician or engineer. Contact your local Grundfos company for more information.

19. Priority of settings

The priority of settings depends on two factors:

1. control source
2. settings.

1. Control source

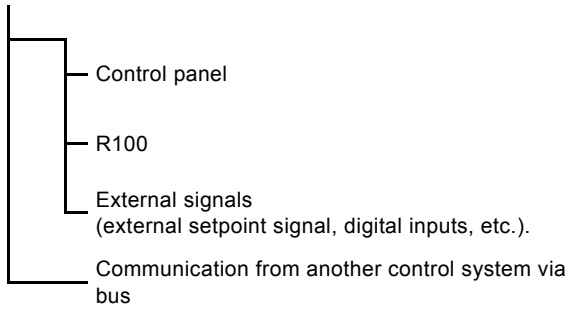

2. Settings

- Operating mode Stop
- Operating mode Max. (Max. curve)
- Operating mode Min. (Min. curve)
- Setpoint setting.

An E-pump can be controlled by different control sources at the same time, and each of these sources can be set differently. Consequently, it is necessary to set an order of priority of the control sources and the settings.

Note ***If two or more settings are activated at the same time, the pump will operate according to the function with the highest priority.***

Priority of settings without bus communication

Priority	Control panel or R100	External signals
1	Stop	
2	Max.	
3		Stop
4		Max.
5	Min.	Min.
6	Setpoint setting	Setpoint setting

Example: If the E-pump has been set to operating mode Max. (Max. frequency) via an external signal, such as digital input, the control panel or R100 can only set the E-pump to operating mode Stop.

Priority of settings with bus communication

Priority	Control panel or R100	External signals	Bus communication
1	Stop		
2	Max.		
3		Stop	Stop
4			Max.
5			Min.
6			Setpoint setting

Example: If the E-pump is operating according to a setpoint set via bus communication, the control panel or R100 can set the E-pump to operating mode Stop or Max., and the external signal can only set the E-pump to operating mode Stop.

20. External forced-control signals

The pump has inputs for external signals for these forced-control functions:

- Start/stop of pump
- Digital function.

20.1 Start/stop input

Functional diagram: Start/stop input:

Start/stop (terminals 2 and 3)		
	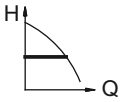	**Normal duty**
	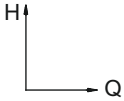	**Stop**

20.2 Digital input

By means of the , one of the following functions can be selected for the digital input:

- Normal duty
- Min. curve
- Max. curve
- External fault
- Flow switch
- Dry running.

Functional diagram: Input for digital function

Digital function (terminals 1 and 9) (terminals 9 and 10) (terminals 9 and 11)		
	H, Q	**Normal duty**
	H, Q	**Min. curve**
	H, Q	**Max. curve**
	H, 5 s delay, Q	**External fault**
	H, 5 s delay, Q	**Flow switch**
	H, Q	**Dry running**

21. External setpoint signal

The setpoint can be remote-set by connecting an analogue signal transmitter to the input for the setpoint signal (terminal 4).

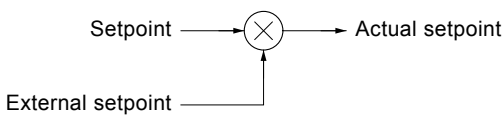

TM03 8601 2007

Fig. 43 Actual setpoint as a product (multiplied value) of setpoint and external setpoint

Select the actual external signal, 0-10 V, 0-20 mA, 4-20 mA, via the R100. See section *17.3.3 External setpoint* on page 30.

If control mode **uncontrolled** is selected by means of the R100, the pump can be controlled by any controller.

In control mode **controlled**, the setpoint can be set externally within the range from the lower value of the sensor measuring range to the setpoint set on the pump or by means of the R100.

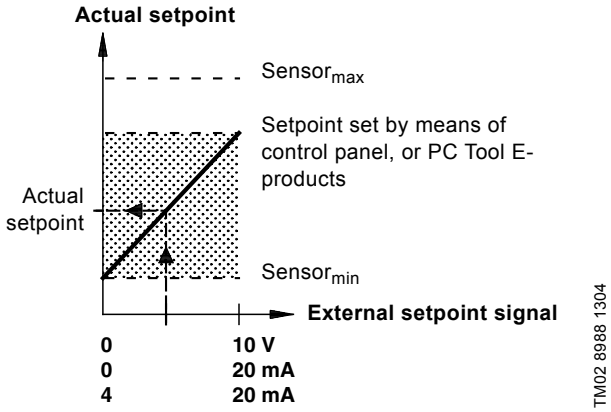

TM02 8988 1304

Fig. 44 Relation between the actual setpoint and the external setpoint signal in control mode controlled

Example: At a sensor$_{min}$ value of 0 psi, a setpoint set of 50 psi and an external setpoint of 80 % (an 8 V analog signal to Terminal 4 if using an analog signal of 0-10 V), the actual setpoint will be as follows:

$$\text{Actual setpoint} = (\text{setpoint} - \text{sensor}_{min}) \times \%_{\text{external setpoint}} + \text{sensor}_{min}$$

$$= (50 - 0) \times 80\ \% + 0$$

$$= 40 \text{ psi}$$

In control mode **uncontrolled**, the setpoint can be set externally within the range from the min. curve to the setpoint set on the pump or by means of the R100. Typically the setpoint is set to 100 % when the control mode is uncontrolled (see section *17.5 Typical display settings for analog-input E-pumps* on page 37).

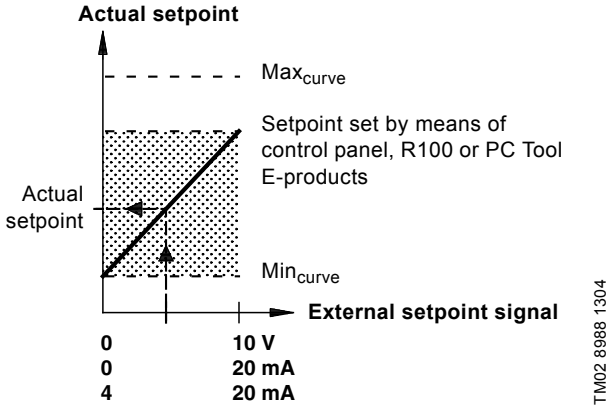

TM02 8988 1304

Fig. 45 Relation between the actual setpoint and the external setpoint signal in control mode uncontrolled

22. Bus signal

The pump supports serial communication via an RS-485 input. The communication is carried out according to Grundfos bus protocol, GENIbus protocol, and enables connection to a building management system or another external control system.

Operating parameters, such as setpoint, operating mode, etc. can be remote-set via the bus signal. At the same time, the pump can provide status information about important parameters, such as actual value of control parameter, input power, fault indications, etc.

Contact Grundfos for further details.

Note ***If a bus signal is used, the number of settings available via the R100 will be reduced.***

23. Other bus standards

Grundfos offers various bus solutions with communication according to other standards.

Contact Grundfos for further details.

24. Indicator lights and signal relay

The operating condition of the pump is indicated by the green and red indicator lights fitted on the pump control panel and inside the terminal box. See fig. 46.

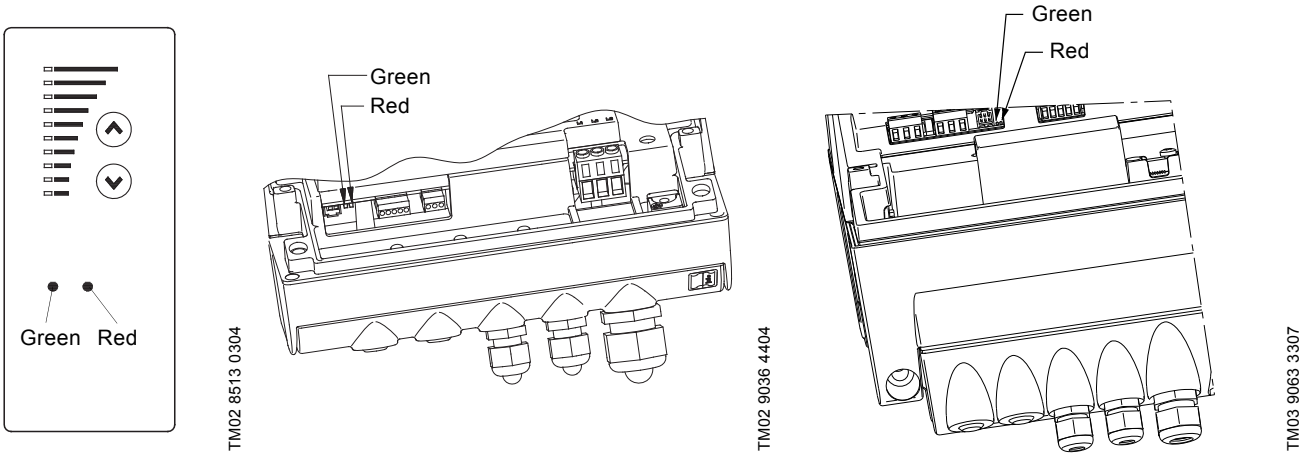

Fig. 46 Position of indicator lights

Besides, the pump incorporates an output for a potential-free signal via an internal relay.

For signal relay output values, see section *17.3.4 Signal relay* on page 31.

The functions of the two indicator lights and the signal relay are as shown in the following table:

Indicator lights		Signal relay activated during:				
Fault (red)	**Operation (green)**	**Fault/Alarm, Warning and Relubricate**	**Operating**	**Ready**	**Pump running**	**Description**
Off	Off					The power supply has been switched off.
Off	Permanently on					The pump is operating.
Off	Permanently on					The pump is stopped by the stop function.
Off	Flashing					The pump has been set to stop.
Permanently on	Off					The pump has stopped because of a Fault/ Alarm or is running with a Warning or Relubricate indication. If the pump was stopped, restarting will be attempted (it may be necessary to restart the pump by resetting the Fault indication). If the cause is "external fault", the pump must be restarted manually by resetting the Fault indication.
Permanently on	Permanently on					The pump is operating, but it has or has had a Fault/Alarm allowing the pump to continue operation or it is operating with a Warning or Relubricate indication. If the cause is "sensor signal outside signal range", the pump will continue operating according to the 70 % curve and the fault indication cannot be reset until the signal is inside the signal range. If the cause is "setpoint signal outside signal range", the pump will continue operating according to the min. curve and the fault indication cannot be reset until the signal is inside the signal range.
Permanently on	Flashing					The pump has been set to stop, but it has been stopped because of a Fault.

Resetting of fault indication

A fault indication can be reset in one of the following ways:

- Briefly press the button ⊛ or ⊛ on the pump. This will not change the setting of the pump.
  A fault indication cannot be reset by means of ⊛ or ⊛ if the buttons have been locked.
- Switch off the power supply until the indicator lights are off.
- Switch the external start/stop input off and then on again.
- Use the R100. See section *17.1.3 Fault indications.*

When the R100 communicates with the pump, the red indicator light will flash rapidly.

25. Emergency operation (only 15-30 hp)

Warning

Never make any connections in the pump terminal box unless all electric supply circuits have been switched off for at least 5 minutes.

Note for instance that the signal relay may be connected to an external supply which is still connected when the power supply is disconnected.

If the pump is stopped and you cannot start the pump immediately after normal remedies, the reason could be a faulty frequency converter. If this is the case it is possible to maintain emergency operation of the pump.

Before change over to emergency operation we recommend you to:

- check that the power supply is OK
- check that control signals are working (start/stop signals)
- check that all alarms are reset
- make a resistance test on the motor windings (disconnect the motor leads from the terminal box).

If the pump remains stopped it is possible that the frequency converter is faulty.

To establish emergency operation proceed as follows:

1. Disconnect the three power supply leads, L1, L2, L3, from the terminal box, but leave the protective ground lead(s) in position on the PE terminal(s).

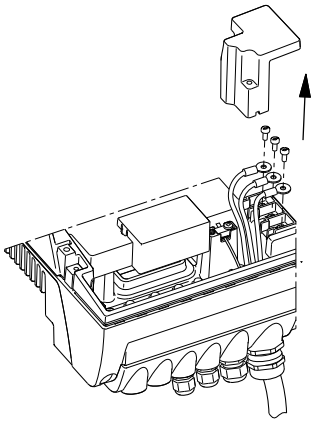

TM03 8607 2007

2. Disconnect the motor supply leads, U/W1, V/U1, W/V1, from the terminal box.

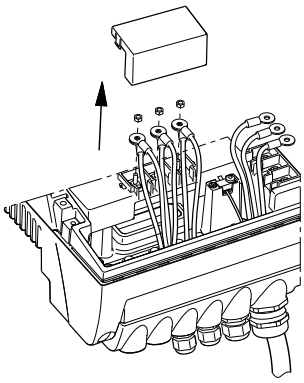

TM03 9120 3407

3. Connect the leads as shown in fig. 47.

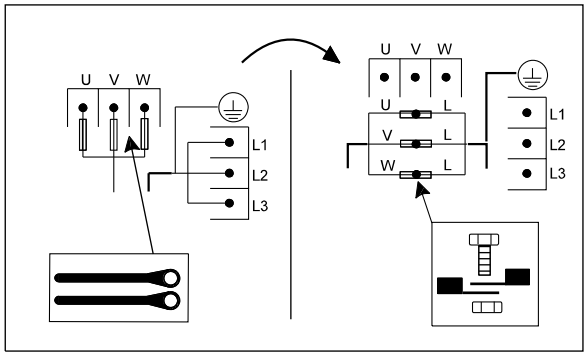

TM04 0018 4807

Fig. 47 How to switch an E-pump from normal operation to emergency operation

Use the screws from the power supply terminals and the nuts from the motor terminals.

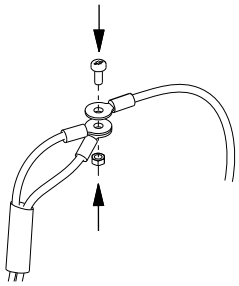

TM03 9121 3407

4. Insulate the three leads from each other by means of insulating tape or the like.

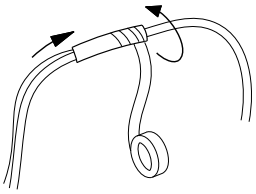

TM03 9122 3407

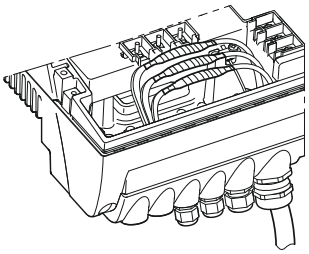

TM03 9123 3407

Warning

Do not bypass the frequency converter by connecting the power supply leads to the U, V and W terminals.

This may cause hazardous situations for personnel as the high voltage potential of the power supply may be transferred to touchable components in the terminal box.

Caution ***Check the direction of rotation when starting up after switching to emergency operation.***

5. A motor starter is required.

26. Insulation resistance

3-10 hp

Caution

Do not measure the insulation resistance of motor windings or an installation incorporating E-pumps using high voltage megging equipment, as this may damage the built-in electronics.

15-30 hp

Caution

Do not measure the insulation resistance of an installation incorporating E-pumps using high voltage megging equipment, as this may damage the built-in electronics.

The motor leads can be disconnected separately and the insulation resistance of the motor windings can be tested.

27. Maintenance and service

27.1 Cleaning of the motor

Keep the motor cooling fins and fan blades clean to ensure sufficient cooling of the motor and electronics.

27.2 Relubrication of motor bearings

3-10 hp pumps

The motor bearings are of the closed type and greased for life. The bearings cannot be relubricated.

15-30 hp pumps

The motor bearings are of the open type and must be relubricated regularly. The motor bearings are prelubricated on delivery. The built-in bearing monitoring function will give a warning indication on the R100 when the motor bearings are due to be relubricated.

Note

Before relubrication, remove the bottom plug in the motor flange and the plug in the bearing cover to ensure that old and excess grease can escape.

When relubricating the first time, use the double quantity of grease as the lubricating channel is still empty.

Frame size	Quantity of grease [ounces]	
	Drive end (DE)	Non-drive end (NDE)
MLE 160	.44	.44
MLE 180	.51	.51

The recommended grease type is a polycarbamide-based lubricating grease.

27.3 Replacement of motor bearings

15-30 hp motors have built-in bearing monitoring function which will give a warning indication on the Grundfos Go or R100 when the motor bearings are due to be replaced.

27.4 Replacement of varistor (only 15-30 hp)

The varistor protects the pump against voltage transients. If voltage transients occur, the varistor will be worn over time and need to be replaced. The more transients, the more quickly the varistor will be worn. When it is time to replace the varistor, Grundfos GO, R100 and PC Tool E-products will indicate this as a warning.

A Grundfos technician is required for replacement of the varistor. Contact your local Grundfos company for assistance.

27.5 Service parts and service kits

For further information on service parts and service kits, visit www.grundfos.com, select country, select WebCAPS.

28. Technical data - three-phase pumps, 3-10 hp

28.1 Supply voltage

3 x 440-480 V - 10 %/+ 10 %, 60 Hz - 2 %/+ 2 %, PE.

3 x 208-230 V - 10 %/+ 10 %, 60 Hz - 2 %/+ 2 %, PE.

Cable: Max 10 mm^2 / 8 AWG.

Use min. 158 °F (70 °C) copper conductors only.

Recommended fuse sizes

Motor sizes from 3 - 7.5 hp: Max. 16 A.

Motor size 10 hp: Max. 32 A.

Standard as well as quick-blow or slow-blow fuses may be used.

28.2 Overload protection

The overload protection of the E-motor has the same characteristic as an ordinary motor protector. As an example, the E-motor can stand an overload of 110 % of I_{nom} for 1 min.

28.3 Leakage current

Motor size [hp]	Leakage current [mA]
3 hp (supply voltage < 460 V) 3 hp (supply voltage > 460 V)	< 3.5 < 5
5 to 7.5 hp	< 5
10 hp	< 10

The leakage currents are measured in accordance with EN 61800-5-1.

28.4 Inputs/output

Start/stop

External potential-free contact.

Voltage: 5 VDC.

Current: < 5 mA.

Screened cable: 20-16 AWG (0.5 - 1.5 mm^2).

Digital

External potential-free contact.

Voltage: 5 VDC.

Current: < 5 mA.

Screened cable: 20-16 AWG (0.5 - 1.5 mm^2).

Setpoint signals

- Potentiometer
  0-10 VDC, 10 kΩ (via internal voltage supply).
  Screened cable: 20-16 AWG (0.5 - 1.5 mm^2).
  Maximum cable length: 328 ft (100 m).
- Voltage signal
  0-10 VDC, R_i > 50 kΩ.
  Tolerance: + 0 %/- 3 % at maximum voltage signal.
  Screened cable: 20-16 AWG (0.5 - 1.5 mm^2).
  Maximum cable length: 1640 ft (500 m).
- Current signal
  DC 0-20 mA / 4-20 mA, R_i = 175 Ω.
  Tolerance: + 0 %/- 3 % at maximum current signal.
  Screened cable: 20-16 AWG (0.5 - 1.5 mm^2).
  Maximum cable length: 1640 ft (500 m).

Sensor signals

- Voltage signal
  0-10 VDC, R_i > 50 kΩ (via internal voltage supply).
  Tolerance: + 0 %/- 3 % at maximum voltage signal.
  Screened cable: 20-16 AWG (0.5 - 1.5 mm^2).
  Maximum cable length: 1640 ft (500 m).
- Current signal
  DC 0-20 mA / 4-20 mA, R_i = 175 Ω.
  Tolerance: + 0 %/- 3 % at maximum current signal.
  Screened cable: 20-16 AWG (0.5 - 1.5 mm^2).
  Maximum cable length: 1640 ft (500 m).

Internal power supplies

- 10 V power supply for external potentiometer:
  Max. load: 2.5 mA.
  Short-circuit protected.
- 24 V power supply for sensors:
  Max. load: 40 mA.
  Short-circuit protected.

Signal relay output

Potential-free changeover contact.

Maximum contact load: 250 VAC, 2 A, cos φ 0.3 - 1.

Minimum contact load: 5 VDC, 10 mA.

Screened cable: 0.5 - 2.5 mm^2 / 28-12 AWG.

Maximum cable length: 1640 ft (500 m).

Bus input

Grundfos bus protocol, GENIbus protocol, RS-485.

Screened 3-core cable: 28-16 AWG (0.2 - 1.5 mm^2).

Maximum cable length: 1640 ft (500 m).

29. Technical data - three-phase pumps, 15-30 hp

29.1 Supply voltage

3 x 440-480 V - 10 %/+ 10 %, 60 Hz - 3 %/+ 3 %, PE.

Cable: Max. 8 AWG (10 mm^2)

Use min. 158 °F (70 °C) copper conductors only.

Recommended fuse sizes

Motor size [hp]	Max. [A]
15	32
20	36
25	43
30	51

Standard as well as quick-blow or slow-blow fuses may be used.

29.2 Overload protection

The overload protection of the E-motor has the same characteristic as an ordinary motor protector. As an example, the E-motor can stand an overload of 110 % of I_{nom} for 1 min.

29.3 Leakage current

Ground leakage current > 10 mA.

The leakage currents are measured in accordance with EN 61800-5-1.

29.4 Inputs/output

Start/stop

External potential-free contact.

Voltage: 5 VDC.

Current: < 5 mA.

Screened cable: 20-16 AWG (0.5 - 1.5 mm^2).

Digital

External potential-free contact.

Voltage: 5 VDC.

Current: < 5 mA.

Screened cable: 20-16 AWG (0.5 - 1.5 mm^2).

Setpoint signals

- Potentiometer
  0-10 VDC, 10 kΩ (via internal voltage supply).
  Screened cable: 20-16 AWG (0.5 - 1.5 mm^2).
  Maximum cable length: 328 ft (100 m).
- Voltage signal
  0-10 VDC, R_i > 50 kΩ.
  Tolerance: + 0 %/- 3 % at maximum voltage signal.
  Screened cable: 20-16 AWG (0.5 - 1.5 mm^2).
  Maximum cable length: 1640 ft (500 m).
- Current signal
  DC 0-20 mA / 4-20 mA, R_i = 250 Ω.
  Tolerance: + 0 %/- 3 % at maximum current signal.
  Screened cable: 20-16 AWG (0.5 - 1.5 mm^2).
  Maximum cable length: 1640 ft (500 m).

Sensor signals

- Voltage signal
  0-10 VDC, R_i > 50 kΩ (via internal voltage supply).
  Tolerance: + 0 %/- 3 % at maximum voltage signal.
  Screened cable: 20-16 AWG (0.5 - 1.5 mm^2).
  Maximum cable length: 1640 ft (500 m).
- Current signal
  DC 0-20 mA / 4-20 mA, R_i = 250 Ω.
  Tolerance: + 0 %/- 3 % at maximum current signal.
  Screened cable: 20-16 AWG (0.5 - 1.5 mm^2).
  Maximum cable length: 1640 ft (500 m).

Internal power supplies

- 10 V power supply for external potentiometer:
  Max. load: 2.5 mA.
  Short-circuit protected.
- 24 V power supply for sensors:
  Max. load: 40 mA.
  Short-circuit protected.

Signal relay output

Potential-free changeover contact.

Maximum contact load: 250 VAC, 2 A, cos φ 0.3 - 1.

Minimum contact load: 5 VDC, 10 mA.

Screened cable: 0.5 - 2.5 mm^2 / 28-12 AWG.

Maximum cable length: 1640 ft (500 m).

Bus input

Grundfos bus protocol, GENIbus protocol, RS-485.

Screened 3-core cable: 28-16 AWG (0.2 - 1.5 mm^2).

Maximum cable length: 1640 ft (500 m).

29.5 Other technical data

EMC (electromagnetic compatibility to EN 61800-3)

Motor [hp]	Emission/immunity
3 5 7.5 10	**Emission:** The motors may be installed in residential areas (first environment), unrestricted distribution, corresponding to CISPR11, group 1, class B. **Immunity:** The motors fulfil the requirements for both the first and second environment.
15 20 25 30	**Emission:** The motors are category C3, corresponding to CISPR11, group 2, class A, and may be installed in **industrial areas** (second environment). If equipped with an external Grundfos EMC filter, the motors are category C2, corresponding to CISPR11, group 1, class A, and may be installed in **residential areas** (first environment). ***Warning*** ***When the motors are installed in residential areas, supplementary measures may be required as the motors may cause radio interference.*** Motor sizes 15, 25, and 30 hp comply with EN 61000-3-12 provided that the short-circuit power at the interface point between the user's electrical installation and the public power supply network is greater than or equal to the values stated below. It is the responsibility of the installer or user to ensure, by consultation with the power supply network operator, if necessary, that the motor is connected to a power supply with a short-circuit power greater than or equal to these values:

Motor size [hp]	Short-circuit power [kVA]
15	1500
20	-
25	2700
30	3000

Note ***20 hp motors do not comply with EN 61000-3-12.***

By installing an appropriate harmonic filter between the motor and the power supply, the harmonic current content will be reduced. In this way, the 20 hp motor will comply with EN 61000-3-12.

Immunity:

The motors fulfill the requirements for both the first and second environment.

Contact Grundfos for further information.

Enclosure class

- Three-phase pumps, 3-10 hp: IP55 (IEC 34-5)
- Three-phase pumps, 15-30 hp: IP55 (IEC 34-5)

Insulation class

F (IEC 85)

Ambient temperature

During operation:

- Min -4 °F (-20 °C)
- Max +104 °F (40 °C) without derating

During storage/transport:

- -40 °F (-40 °C) to +140 °F (+60 °C) (3-10 hp)
- -13 °F (-25 °C) to +158 °F (70 °C) (15-30 hp)

Relative air humidity

Maximum 95 %.

Sound pressure level

Motor [hp]	Sound pressure level [dB(A)]	
HP	2-POLE	4-POLE
3	82	64
5	87	75
7.5	93	69
10	82	71
15	68	64
20	68	66
25	70	72
30	70	

30. Installation in the USA and Canada

Note ***In order to maintain the UL/cUL approval, follow these additional installation instructions. The UL approval is according to UL508C.***

30.1 Electrical connection

30.1.1 Conductors

Use minimum 140/167 °F (60/75 °C) copper conductors only.

30.1.2 Torques

Power terminals

Power terminal: 1.7 ft-lbs (2.3 Nm)

Relay, M2.5: 0.4 ft-lbs (0.5 Nm)

Input control, M2: 0.15 ft-lbs (0.2 Nm)

30.1.3 Line reactors

Max. line reactor size must not exceed 2 mH.

30.1.4 Fuse size/circuit breaker

If a short circuit happens the pump can be used on a power supply delivering not more than 5000 RMS symmetrical amperes, 480 V maximum.

Fuses

When the pump is protected by fuses they must be rated for 600 V. Maximum sizes are stated in table below.

Up to 10 hp use Class K5 UL Listed fuses. For 10 to 30 hp use any class UL Listed fuse.

Circuit breaker

When the pump is protected by a circuit breaker, this must be rated for a maximum voltage of 480 V. The circuit breaker must be of the "Inverse time" type.

The interrupting rating (RMS symmetrical amperes) must not be less than the values stated in table below.

USA - hp

2-pole	4-pole	Fuse size	Circuit breaker type/model
3	3	25 A	25 A / Inverse time
5	5	40 A	40 A / Inverse time
7.5	-	40 A	40 A / Inverse time
10	7.5	50 A	50 A / Inverse time
15	15	80 A	80 A / Inverse time
20	20	110 A	110 A / Inverse time
25	25	125 A	125 A / Inverse time
30	-	150 A	150 A / Inverse time

30.1.5 Overload protection

Degree of overload protection provided internally by the drive, in percent of full-load current: 102 %.

30.2 General considerations

For installation in humid environment and fluctuating temperatures, it is recommended to keep the pump connected to the power supply continuously. This will prevent moisture and condensation build-up in the terminal box.

Start and stop must be done via the start/stop digital input (terminal 2-3).

31. Disposal

This product or parts of it must be disposed of in an environmentally sound way:

1. Use the public or private waste collection service.
2. If this is not possible, contact the nearest Grundfos company or service workshop.

Subject to alterations.

Grundfos CBS Inc.
902 Koomey Road
Brookshire, TX 77423 USA
Phone: 281-994-2700
Toll Free: 1-800-955-5847
Fax: 1-800-945-4777

www.grundfosexpresssuite.com

98669637 0714

ECM: 1138497